PACIFIC HOSEFLEX PTY LTD

02

STAINLESS STEEL HOSE

VITALFLEX®

VITALFLEX®

Stainless Steel hose Range

VITALFLEX® - JACKETED HOSE Page 39
Size : 1/4'' to 14''
Working Pressure : 1310 to 21546 kPa

VITALFLEX® - SEISMIC JOINTS Page 40
Size : 1/4'' to 14''
Working Pressure : 20 to 29523 kPa

VITALFLEX® - ANNULAR Page 41
Size : 1/2'' to 4''
Working Pressure : 80 to 19523 kPa

VITALFLEX® - OMEGA / BRAIDED BRAID Page 42
Size : 5'' to 20''
Working Pressure : 100 to 2902 kPa

VITALFLEX® - HIGH PRESSURE Page 43
Size : 1/4'' to 6''
Working Pressure : 35 to 28283 kPa

VITALFLEX® - ULTRA HIGH PRESSURE Page 44
Size : 1/4'' to 2''
Working Pressure : 103 to 30378 kPa

VITALFLEX® - EXTREME HIGH PRESSURE Page 45
Size : 3'' to 4''
Working Pressure : 8618 kPa

VITALFLEX® - 400 MONEL Page 46
Size : 1/4'' to 3''
Working Pressure : 55 to 20753 kPa

VITALFLEX® - 276 HASTELLOY HOSE Page 47
Size : 1/2" - 8"
Working Pressure : 41 to 11859 kPa

VITALFLEX® - 625 INCONEL Page 48
Size : 1/4'' to 8''
Working Pressure : 41 to 21546 kPa

VITALFLEX® - PUMP CONNECTORS - TABLE 'E' / BSPT MALE Page 49
Size : 2'' to 8''
Working Pressure : 1201 to 5003 kPa

VITALFLEX® - HOSE - UHP-SILVERSNAKE® Page 50
Size : 1/4''
Working Pressure : 40500 kPa

VITALFLEX® HYTAR® BITUMEN HOSE - CONVOLUTED Page 51
Size : 2 1/2''
Working Pressure : 4002 kPa

VITALFLEX® - ROPE LAGGED Page 52
Size : 6" - 10"
Working Pressure : 34 kPa to 2530 kPa

VITALFLEX® - TTMA DROP HOSE Page 53
Size : 3'' to 4''
Working Pressure : 294 to 3202 kPa

VITALFLEX® - OXYGEN LANCE HOSE Page 54
Size : 5'' - 20''
Working Pressure : 100 to 2455 kPa

STRIPWOUND HOSE Page 55-56
Size : 3/4'' to 12''
Profile : Convoluted

VACUUM JACKETED HOSES Page 57-62
Size : 5/8'' to 2''
Profile : Annular / Close Pitch

Stainless Steel Hose Design

Introduction

The VITALFLEX® range is especially designed to achieve several objectives in pipe work design. These include, absorption or vibration, operate under vacuum, handle temperature extremes, suppress rigid pipe noise transmitted, accommodate reciprocating and flexing movement, operate effectively under high pressures and adjust or correct for misalignment.

VITALFLEX® hose is a general purpose industrial hose and is available in different grades of stainless steel including 304, 316, 321, Monel, C276 & Inconel.

Convoluted Hose Design

The corrugated hose is manufactured from a cylindrical, thin walled tube formed from rolled strip and welded at the seam. Impressed into this tube is a corrugated annular profile. Annular corrugation means each convolution is perpendicular to the centre line of the hose giving a distinct advantage of movement with each corrugation being relatively independent of movement from each other. When the corrugations are closely spaced, the hose is referred to as 'closed pitch' hose. Conversely, when the corrugations are more widely spaced, the hose is referred to as 'open pitch'.

Metallic **-** Excellence in liquid and gas transfer applications

Temperature

Contingent upon the extremes of temperature; hot or cold metal is a positive choice as it can withstand temperature extremes.

Chemicals

Metal hose is an excellent option as it effectively controls exposure to a wide range of chemicals - both internal and external.

Permeation

Metal hose is not subject to permeation whereas non metal hose can allow permeation through the hose wall material. Pacific Hoseflex has Australian Gas Approved (AGA) certified hose to assure customers of compliance.

Failure

Generally speaking, metal hoses do not disintegrate rapidly causing any major failure. Warning signs are evident that leaks are present and the medium escapes gradually. Nonmetallic hoses can be prone to sudden failure.

External Abrasion and Over bending

A range of options exist to prevent these occurrences; including external braid, spring guards, rubber and PVC covers and protective sleeves.

Heat and fire

Our metal hoses maintain form and structure up to 700°C. Activfire Certified.

Fittings / Flanges

We can adapt virtually any fittings and flanges to a metal hose other hose products require special and significant variances. We specialize in providing flexible options.
Certified Welding methods:

- AS4041 Class 1
- ASME B31.3
- ASME IX
- AS/NZS 3992
- ASME BPVC.IX & AS 1554.1 SP

Stainless Steel Hose Vacuum

The VITALFLEX® hose in externally pressurized system (under vacuum).
When a corrugated metal hose is considered to be used in a system which is externally pressurized or under vacuum conditions (i.e. vacuum pumps), the question as to how the hose will behave under "full vacuum" or "perfect vacuum" is often asked.

The definition of vacuum is used to describe any pressure that is lower than standard atmospheric pressure. The most widely accepted unit of vacuum measurement is the Torr (after an Italian scientist Torricelli). So one standard atmospheric pressure can be expressed (in the units more commonly used within our community) as the following:
1 atmosphere = 760 Torr = 14.7 PSI

According to Columbia Encyclopedia: "a perfect vacuum has never been obtained.." and therefore expressions "full vacuum" or "perfect vacuum" are used loosely to express conditions with near "0" pressure. Take a look at the table below to compare different "vacuum conditions":

	Pressure (Torr)	**Pressure (PSI)**
Vacuum Cleaner	600	11.60
Liquid Ring Vacuum Pump	24	0.46
Rotary Vane Pump	1 to 0.01	0.02 to 0.0002
Near Earth Outer Space	0.00001	0.000000002

Corrugated hose can be used under vacuum conditions and will not be overstressed under such condition, provided the hose section is adequately braced against buckling. The design approach is similar to that for internally pressurized system keeping in mind that external air pressure causes the hose to contract inwardly (rather than expand axially). The proper design though, requires evaluation of the system as a whole (not just one segment - such as corrugated hose - at a time).

Stainless Steel Hose Design

Flexibility

The flexibility of the VITALFLEX® hose is the result of the bending of the metal corrugations. Service life varies depending upon the severity of the flexing, temperature, corrosive conditions, pressure and vibration to which the hose is subjected.

Unless restrained, corrugated hose will elongate when subjected to increased internal pressure. Restraint is provided by a braided covering, consisting of a tubular sheath of woven metal wires fitted tightly over the corrugated hose and secured at each end. Bending and flexibility of the corrugated hose is not appreciably affected by the wire braid covering.

Tolerances

The nominal length refers to the hose complete with end fittings and indicates the total length. Unless otherwise arranged when ordering, the following length tolerances must be taken into account when checking the nominal length:

Dimensions in mm

Nominal Lengths	up to 500		over 500 up to 1000		over 1000 up to 2000	
Tolerances ISO 10380:2012	Min. 495	Max. 515	Min. 990	Max. 1030	Min. 1980	Max. 2060

- The "End to End" or "Seat to Seat" length of a hose assembly shall be the length as ordered to a tolerance of +3% / -1
- Smaller length tolerances are possible, but must be specially agreed when ordering.
- Refer to page 340 for hose measurement guide

Braid

Annular Braid

Style: Open pitch
Material: 316 and 304
Pressure: Medium

Omega Braid

Style: Close Pitch
Material: 316 and 304
Pressure: Medium

Braided Braid

Style: Open Pitch
Material: 316 and 304
Pressure: High

Stainless Steel Hose Design

Flow Velocity Consideration

The flow velocity in corrugated metal hose should never exceed 150 ft/sec for gas, or 75 ft/sec for liquids. When the hose is installed in a bent condition, these flow values should be reduced proportionally to the degree of the bend. Where the flow velocity exceeds these rates, an interlocked metal hose liner is recommended. Refer to page 339 for Nomograph.

Service Life

The VITALFLEX® is engineered to provide maximum service life when properly installed. Incorrect installation, incorrect flexing or careless handling in an application will reduce the effective service life of the hose and cause premature failure of an assembly. The service life can be affected by many external factors, the environment surrounding the assembly as well as the media being transferred will together determine a general guide to the service life.

Non Destructive Pressure Testing

The nominal pressure rating of a VITALFLEX® can varies according to type, material and size. The pressure can be affected by factors such as temperature, pulsation or shock conditions and bending stresses. To avoid distortion of the convolutions of the hose, the maximum test pressure quoted in the literature must not be exceeded. If requested all hoses can be tested to 1½ times the customers stated working pressure, provided that this does not exceed the stated maximum test pressure.

Applicable Standards

If required your hoses can be manufactured for use with gas and water.
Corrugated Metal Hoses: ISO 10380
AGA Approved: AS 4631 (upon request)
Watermark Approved: WMTS 520 (upon request)
Welding Compliant: AS 4041- Class 1 (upon request)
Seismic Rated: AS 1170 (upon request)
Activfire Certified: AS 2118.1

Convolution Profile

Annular

Omega / Braided Braid

High Pressure

Monel

Stainless Steel Hose - Covers and Liners

Covers

To protect the VITALFLEX® from unusual external abuse you can use different armours and covers such as: stainless steel interlock, heat shrink, lay-flat, scuff guarding, fire sleeve, fibre glass tape, PVC, rubber, wire spring-guard and rope lag cover.
Refer to Cover Section Page 285 for more information

Silicone Coated Fibreglass Sleeve
Size : 6mm to 130mm
Material : Silicone

PVC Covering
Size : 1.6mm to 125.0mm
Material : Polyolefin

Wire Spring Guard
Size : 20mm to 100mm
Material : 316/304 Stainless Steel, Galvanised

Rope Lag
Size : 6mm to 48mm
Material : Sisal Rope

Wire Bend Restrictor
Size : 20mm to 100mm
Material : 316/304 Stainless Steel, Galvanised

Hose Floats
Size : 10mm - 130mm Hose O.D.
Material : Polyethyle

Pigstail
Size : 7mm to 99mm I.D.
Material : HPDE (High Density Polyethylene)

Bird & Rodent Proofing Briad
Size : 6mm to 150mm
Material : 316/304 Stainless Steel

Whipsock
Size : 14mm to 180mm
Material : 316/304 Stainless Steel, Galvanised

Rawhide
Size : 22.9mm to 93.0mm
Material : Nylon

Stainless Steel Interlock Cover
Size : 3/4' - 12"
Material : 304 Stainless Steel

Ball Joint Armor
Size : 1" - 6"
Material : Stainless Steel, Galvanised

Layflat
Size : 20mm to 200mm I.D.
Material : PVC with low pressure stability

Hose Handling Sling
Size : 4" - 12" Hose Dia.
Material : 100% nylon webbing

Liners

The most common liner used in a VITALFLEX® is a metal interlock hose. The liner will allow a smooth flow rate whilst maintaining limited flexibility. The interlock will partially reduce the bend radius and inside diameter of the corrugated hose. The smooth liners reduce associated noise. Another alternative liner is braid which doesn't reduce the bend radius of the hose.

Interlock Liner

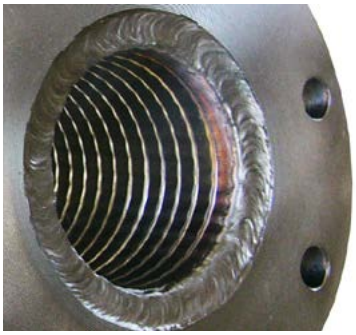

Braid Liner

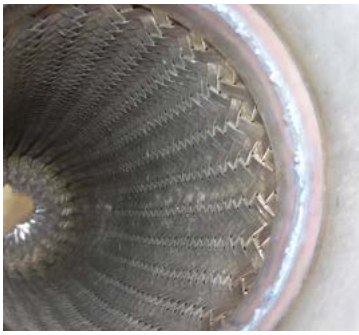

Calculating Hose Length

Minimum Bend Radius Occurs at Offset Position

The moving end is free to move "out of line" from neutral position.

To find the live hose length:

$$L = \sqrt{6(RT) + T2}$$

$$Lp = \sqrt{L2 - T2}$$

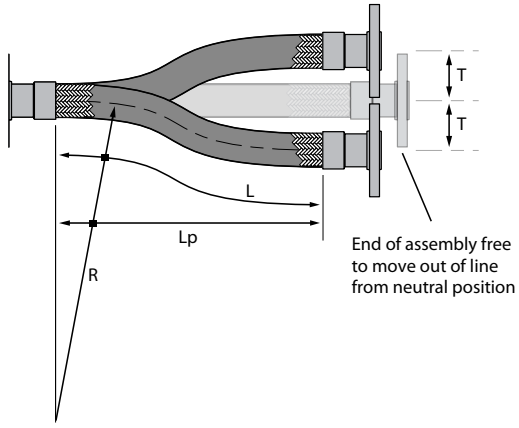

Minimum Bend Radius Occurs at In Line Position

The moving end of the hose is restricted to move only up and down in line as the hose crosses neutral position.

To find the live hose length:

$$L = \sqrt{20(RT)}$$

$$Lp = \sqrt{L2 - T2}$$

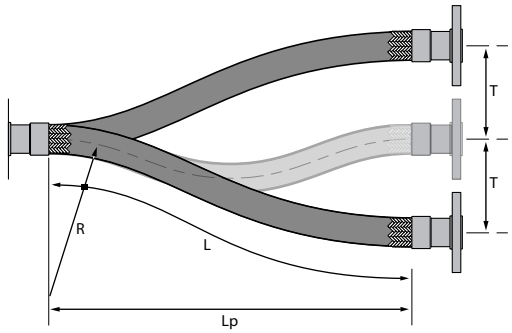

Horizontal Movable Pipe System

$$L = 4R + 1.57T$$

$$H1 = 1.43R + 0.79T$$

$$H2 = 1.43R + 0.5T$$

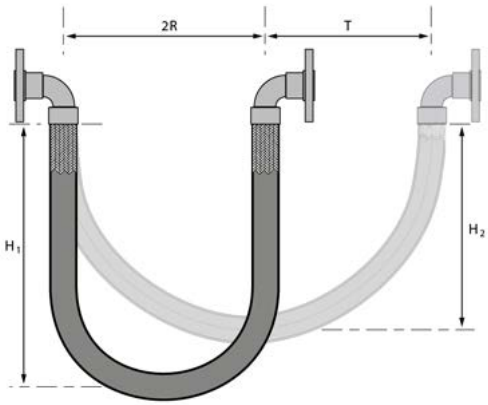

Vertical Movable Pipe System

$$L = 4R + \frac{T}{2}$$

$$H_1 = 1.43R + \frac{T}{2}$$

L = Live Hose Length (mm)
R = Minimum Dynamic Bend Radius for Constant Flexing (mm)
T = Total Travel (mm)
H1 = Hang Length of the Loop (mm)

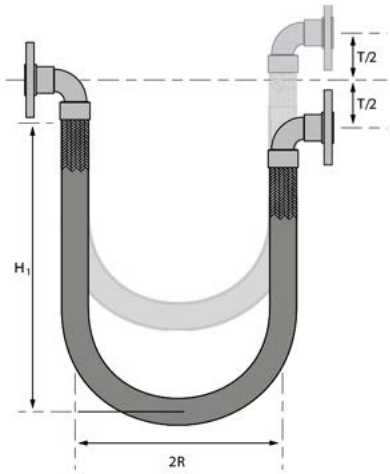

Installation Precautions

Prior to Installation

1. Examine the hose for any obvious damage. IF THE HOSE IS DAMAGED, DO NOT USE. Examples of damage may include slices to the cover, kinks, broken braid, and crushing of the hose (can reduce life and pressure rating).

2. Review application to ensure proper selection of hose has been made by examining materials, pressures, chemical compatibility, temperature and environment.

3. Hose movement should be restricted to a SINGLE PLANE (Drawing A) to minimize the resultant twisting (torque). Note: The flexing plane should also be the plane in which the bending occurs. Excessive bending will induce stress fatigue (Drawing B).

4. Axial movement should be eliminated. The hose should not be stretched or compressed along its longitudinal axis when installed in-line (Drawing C).

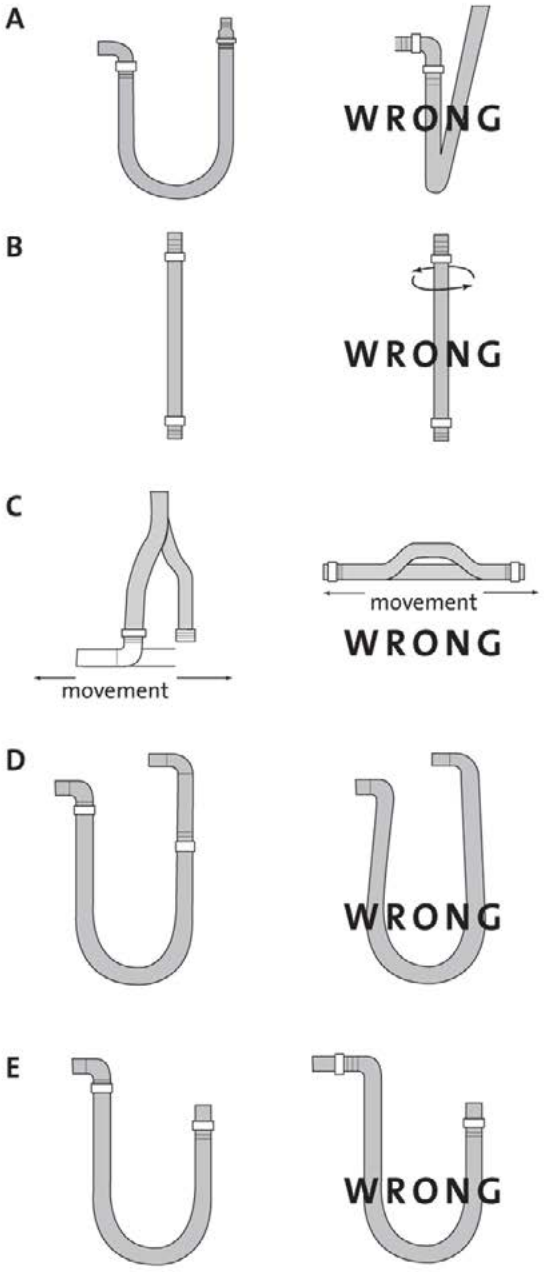

Installation

Never use hose below minimum bend radius (Drawing D). Bend radius (measured to inside radius of fluoropolymer-lined hose and centre line for the VITALFLEX®) are given for individual products and sizes (consult factory for specific data). These values represent the minimum bend radius with which the hose can be properly installed. If these values are not maintained, the hose can fail prematurely.
Note: In some cases, vacuum and pressure ratings are based on not exceeding 2% minimum bend radius (consult factory for specific hose ratings).

Do not allow severe bends (Drawing E). Severe bends can cause kinking in a hose or overstress the assembly/material, resulting in damage and ultimate failure. If severe bends cannot be avoided, use elbows designed to accommodate the direction change.

Do not twist (torque) assembly along centre line during installation. The likelihood of leakage/failure increases for hoses that are twisted (torqued) during assembly. The proper use of floating flanges and swivel-type fittings (i.e., JIC) can eliminate improper twisting.

Nominal Hose Size

1/2″	1″	1 1/2″	2″	3″	4″	5″	6″
10	10	15	25	40	30	60	75

Torque (ft.-lbs.)

• For accurate tightening a torque wrench is HIGHLY recommended. If a flange leak occurs on one side of a properly torqued flange, the bolts should not be over-torqued. Instead loosen the bolts on the non-leaking side the same amount you tighten the bolts on the leaking side.

Bolt Torque Sequence

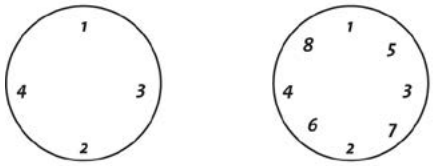

Velocity in Metal Hose

When a gas or liquid is conveyed in a VITALFLEX® assembly and it exceeds the limits, resonant vibration can occur. Resonance may cause very rapid failure of the assembly. VITALFLEX® hose should not exceed 150 ft./sec for gas applications and 75ft./sec. for liquids. High flow velocity can cause high frequency vibrations. Under such circumstances, corrugations may move from both "inside and out" as they are all connected - leading to cracks in over-stressed zones. Neither the crests nor valleys of the corrugations are protected from this kind of stress.

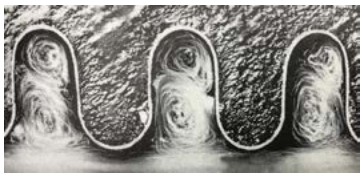

Flow Velocity

To avoid circumferential cracks, we have maximum recommended velocities for gas and liquid flowing through the hose. The rates are determined not only by the type of media but also by the configuration of the assembly. The following table comes to us from NAHAD Metal Design Guide, Section 5 - Liner to Handle High Media Velocity.

Maximum Recommended Flow Velocity

	Internally Unbraided		Internally Braided	
Configuration	**Dry Gas**	**Liquid**	**Dry Gas**	**Liquid**
Straight	100 ft/s	50 ft/s	150 ft/s	75 ft/s
45° Bend	75 ft/s	40 ft/s	115 ft/s	60 ft/s
90° Bend	50 ft/s	25 ft/s	75 ft/s	40 ft/s
180° Bend	25 ft/s	12 ft/s	38 ft/s	19 ft/s

These recommendations come to us from NAHAD, but it is worth noting that there are other international bodies with different limits. For instance, the British Standard 6501 lists the maximum flow velocity for gas in a straight run of hose at 60 m/s, or 197 ft/sec. On the other hand, ISO 10380 lists the maximum at 30 m/s, or 98 ft/sec for gas.

Maximum Permissible Flow Rates

	GAS		LIQUID	
Hose ID (in.)	**CFH (ft³/hour)**	**CFM (ft³/min.)**	**CFH (ft³/hour)**	**CFM (ft³/min.)**
1/4″	283	4.72	141.5	2.36
3/8″	544.4	9.08	272.2	4.54
1/2″	923.4	15.4	461.7	7.7
3/4″	1,882.7	31.4	941.4	15.7
1″	3,309.8	55.2	1,654.9	27.6
1-1/4″	5,156.6	86	2,578.3	43
1-1/2″	8,034.6	134	4,017.3	67
2″	11,770.1	196.3	5,885.1	98.15
3″	26,482.5	441.67	13,241.3	220.835
4″	47,068.6	785	23,534.3	392.5
5″	72,911.4	1,216	36,455.7	608
6″	104,930	1,750	52,465	875
8″	179,880	3,000	89,940	1,500
10″	275,816	4,600	137,908	2,300
12″	407,728	6,800	203,864	3,400
14″	509,660	8,500	254,830	4,250
16″	689,540	11,500	344,770	5,750
18″	869,420	14,500	434,710	7,250
20″	1,079,280	18,000	539,640	9,000
22″	1,319,120	22,000	659,560	11,000
24″	1,588,940	26,500	794,470	13,250

In those applications where product velocities exceed the limits, a revision of the assembly design might include:

1) Addition of an interlocked metal hose liner.
2) An increase in the corrugated hose I.D.
3) A combination of the above.

Pressure & Vibration Information

Pressure Drop

Pressure drop in a piping system is often a concern of the designer. Compared to rigid pipe, there is always a greater pressure drop in corrugated metal hose. The following graphics are offered as aids in estimating pressure drop in corrugated hose conveying water and air. The values derived are approximate and apply only to straight line installations. Bends and fittings in the hose assembly can increase the pressure drop.

For a rough estimate, it can be assumed that the pressure loss in corrugated hoses in the turbulence zone is around 150% higher than in new welded steel pipes. I.e. the diameter of a corrugated hose would have to be increased by 20% to equal the pressure loss of steel pipe. In the high-velocity zone, corrugated hoses are around 450% higher due to the marked vortex activities; in this case, a diameter increase of 41% would be necessary.

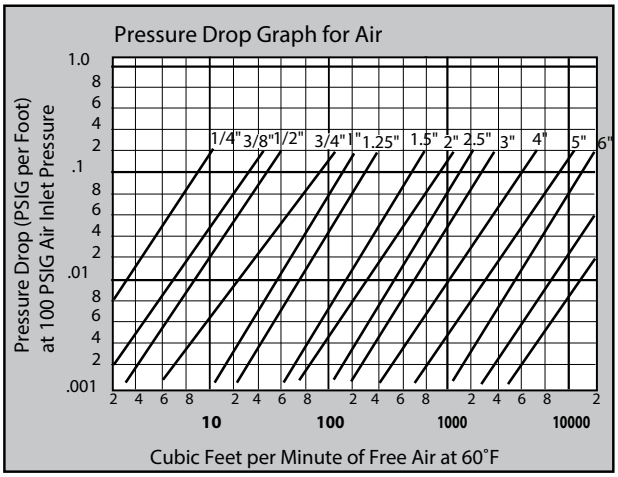

For air inlet pressures other than 100 psig:
PD = PD @ 100 psig $\left(\frac{100 + 14.7}{P + 14.7}\right)$

Water Pressure loss

VITALFLEX® hoses are used for conveying of substances of different consistency (gaseous, liquid or solid). One of the important factors to consider in designing systems that implement metal hoses, is the loss of pressure. Due to its profile the pressure loss in corrugated hoses is significantly higher than in steel pipes - almost 100%, and about 20% to 25% higher for the stripwound hoses. To find out pressure loss over a certain length of hose we can use Pressure Loss graph below - for example: we need to calculate the pressure loss in 85 feet long 2'' Corrugated Hose (which transfers water) with Flow Rate been 1400 cubic feet per hour. By using calculator below we find that 1400 ft3/hour. corresponds to 175 gal/min. Then we plot the 175 gpm on the X-axis of the chart below until we "hit" the line for 2'' hose ID, then by going over horizontally to the Y-axis, we find that Pressure Loss per foot of hose will be about 3.7 psi. So that the total pressure drop over the hose length will be 314.5 psi (3.7 x 85).

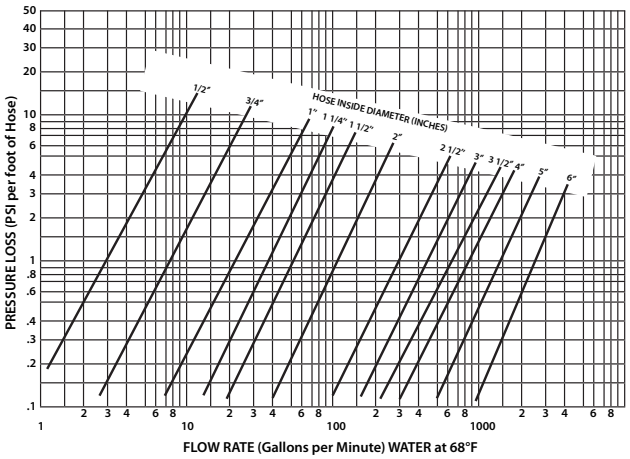

Keep in mind that if you transfer gaseous substance through the hose then you need to find the ratio of the density of gas over the density of water and adjust the pressure drop respectively. For example if you transfer natural gas (density = 0.050 lb/ft3) and knowing that water density = 62.4 lb/ft3 we can find out the pressure drop as the following: 3.7 x (0.050/62.4) = 0.0030 psi/ft or 0.255 psi for entire length of hose (85 x 0.003).

Vibration information and graph

The inherent flexibility of corrugated hose plus the dampening effect of the wire braid combine to create the excellent vibration isolation qualities of corrugated metal hose. The graph below defines the combination of amplitudes and frequencies considered to be normal industrial vibration.

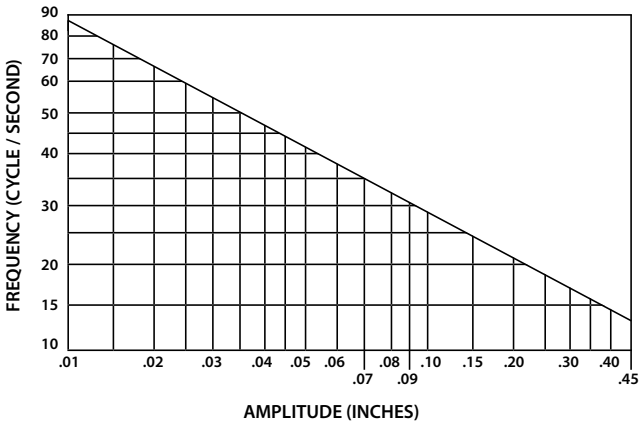

Jacketed Hose

Vitalflex® Jacketed Hose

A Jacketed Hose assembly consists of a "hose within a hose." An inner or primary media conveying hose is enclosed or jacketed by a larger diameter hose. The hoses are joined at each end by specially designed fittings so that there is no media pathway between the two hoses.

Jacketed assemblies are often specified when the primary media must be kept at either an elevated or cryogenic temperature. Steam is often circulated through the jacket hose to keep a viscous material in the inner hose hot and easily conveyed. A vacuum can also be pulled on the jacket hose to insulate cryogenic liquids being conveyed in the inner hose.

The media typically is steam, hot oil or hot water to raise the temperature of the fluid moved in the internal hose. Also cold products such as liquid helium or nitrogen can be used to lower the temperature of the fluid with-in the internal hose.

The specialist hose design can also be used to contain hazardous medium in the event of a rupture. The outer hose will capture any medium that leaks from the inner hose preventing any safety or environmental issues. Sensors can be installed on the ports of the outer hoses to analyse any changes in pressure or gas detection.

Following Applications:

- Heated processes
- Rail car and tank truck loading/unloading
- Marine transfer
- Flexible connections to vibrating equipment
- To relieve pump housing stresses
- Hazardous material piping system using an alarmed vacuum jacket
- Safety barrier for toxic processes
- Leak detection systems
- Liquified food transfer systems
- Chlorine transfer
- Cryogenics (fast freezing)

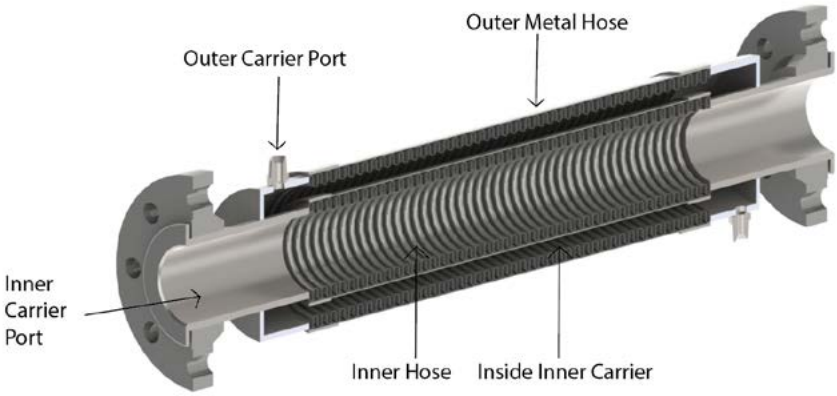

Inner hose nb size	6mm	10mm	12mm	19mm	25mm	32mm	38mm	50mm	65mm	75mm	100mm	125mm	150mm	200mm
Outer hose nb size	12mm	19mm	25mm	32mm	38mm	50mm	65mm	75mm	100mm	150mm	150mm	200mm	200mm	250mm
Inner hose max pressure (kPa)	16270	11299	8445	7129	5487	4136	3840	3930	2826	2310	1654	1316	1137	1643

Seismic Joints

Seismic Joints and Expansion Loops

Model name: VITALFLEX-V and VITALFLEX-U

VITALFLEX® seismic joints and expansion loops are engineered to account for the cumulative movement(s) in piping systems. The VITALFLEX® joint have been designed to counter thermal expansion/contraction, offset and rotation.

Piping used in locations subject to seismic conditions have their own set of unexpected random movements. The random motion common to earthquakes, requires that seismic expansion joints be capable of movement in any direction and are able to withstand the acceleration forces.

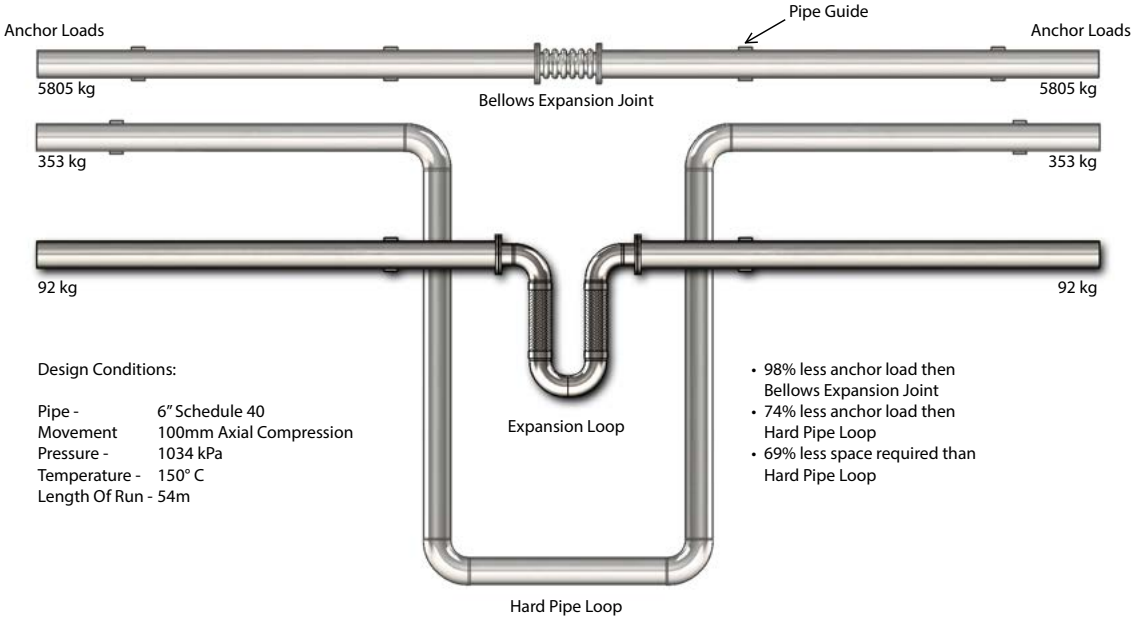

Significant cost and safety benefits found in Pacific Hoseflex seismic expansion joints.

- It is an inexpensive alternative to dual-tied bellows expansion joints and ball joints
  Metal Hoses: ISO 10380
- During an earthquake, it protects equipment by allowing boilers, chillers, fan-coil units and other systems to move independently from buildings such as hospitals, high rises and stadiums
  Rated: AS 1170 (upon request)
- Installation at the connection point, prevents nozzles from cracking or shearing off

Stainless steel is superior to carbon steel, galvanised steel and copper. Where a VITALFLEX® joint connects directly to these materials in a wetted or condensing installation, the adjoining pipework becomes the anode and corrodes at the connection or weld. The stainless joint is the protected member where the dissimilar connecting pipe carries the risk. This applies to galvanised fire main and copper HVAC connections.

When NOT welded and dissimilar metal flanges or threads are bolted or screwed together consider a full dielectric isolation method which can include a isolating gasket, sleeves and washers as a complete kit. This will break the electrolyte path. Verify electrical resistance across the joint after installation and confirm no bypass through supports, brackets, conduit or earthing straps. Seek electrical engineering advice on installation requirements.

Galvanic corrosion is driven by the internal potential difference between the two metals (the voltage gap on the galvanic series). Earthing shifts the absolute electrical potential of the entire system relative to the earth, but the internal gap between the stainless steel and carbon steel remains exactly the same. Galvanic corrosion to happen, you need a metallic path (the weld) and an ion path (the mains water). Earthing does nothing to block the ions travelling through the water from the carbon steel to the stainless steel.

See Expansion Joint catalogue for data sheets Page 88

Stainless Steel Hose

VITALFLEX® - Annular

Part No.: SS0-A Tube Only / SS1-A Tube and Single Braid / SS2-A Tube and Double Braid
Construction: Annular / Close Pitch
Tube Available: 304 / 316 Stainless Steel
Braid Available: 304 / 316 Stainless Steel
Size Available: 1/4" - 4"
Max Temp: -276°C to 700°C

	Low	Med	High
Flexibility		●	
Cycle Life			●
Pressure Rating		●	
Chemical Resistance			●
Wall Thickness			●

Construction

Applicable Standards:
Corrugated Metal Hoses: ISO 10380
AGA Approved: AS 4631 (upon request)
Watermark Approved: WMTS 520 (upon request)
Welding Compliant: AS 4041- Class 1 (upon request)
Seismic Rated: AS 1170 (upon request)
Activfire Certified: AS 2118.1 (upon request)

Temperature Correction Factor ISO 10380 (316L)																			
-200	-150	-100	-50	0	20	50	100	150	200	250	300	350	400	450	500	550	600	650	700
1.0	1.0	1.0	1.0	1.0	1.0	0.93	0.83	0.72	0.66	0.62	0.59	0.56	0.55	0.53	0.51	0.50	0.50	0.19	0.1

Annular

Nominal Dia.		Outside Dia. (mm)			Weight (Kg/m)			Min. Bend Radius(mm)		Working Pressure (kPa)			Burst Pressure (kPa)		
mm	inch	SSO	SS1	SS2	SS0	SS1	SS2	Static	Dynamic	SS0	SS1	SS2	SS0	SS1	SS2
6	1/4"	9.60	10.80	12.10	0.13	0.25	0.39	28	80	496	16270	19523	1985	65079	78095
10	3/8"	14.50	15.50	16.70	0.19	0.37	0.53	38	129	496	11299	13560	1985	45197	54242
12	1/2"	16.70	18.00	19.72	0.34	0.50	0.68	45	139	496	8445	10134	1985	33780	40536
20	3/4"	26.70	28.00	29.20	0.58	0.88	1.18	67	167	296	7128	8555	1186	28513	34221
25	1"	32.20	33.70	34.90	0.79	1.12	1.46	84	190	296	5487	6583	1186	21950	26335
32	1 1/4"	41.20	42.60	43.80	1.13	1.60	2.05	105	260	296	4136	4963	1186	16545	19854
40	1 1/2"	49.50	50.90	52.10	1.25	1.84	2.43	130	298	193	3840	4605	772	15359	18420
50	2"	60.30	61.70	62.90	1.34	2.27	3.20	160	318	193	3930	4715	772	15718	18862
65	2 1/2"	84.00	85.30	88.30	1.76	2.78	3.83	203	500	100	2826	4521	400	11307	18084
80	3"	98.00	100.30	102.30	1.81	2.99	4.19	229	558	90	2310	3696	400	9240	14784
100	4"	124.00	126.30	128.30	2.52	4.01	5.50	330	685	80	1654	2646	320	6618	10584

Part Number Key:

SSABC-D-E

A:	**Braid quality required**	0 = no braid 1 = Single Braid 2 = Double Braid 3 = Triple Braid
B:	**Tube Material**	6S = 316 Tube 4S = 304 Tube
C:	**Braid Material**	6S = 316 Braid 4S = 304 Braid
D:	**Hose Type**	A = Annular, B = Braided Braid, O = Omega
E :	**Hose Size**	06 = 1/4", 10 = 3/8", 12= 1/2", 20= 3/4", 25 = 1", 32=1-1/4", 40 = 1-1/2"

Example: SS16S4S-A-40 = 1-1/2" Single Braided Annular Stainless Steel Hose, 316 Tube and 304 Braid
Example: SS26S6S-A-50 = 2" Double Braided Annular Stainless Steel Hose, 316 Tube and 316 Braid

Stainless Steel Hose

VITALFLEX® - Omega / Braided Braid

Omega Part No.: SS0-O Tube Only / SS1-O Tube and Single Braid / SS2-O Tube and Double Braid
Braided Braid Part No.: SS0-B Tube Only / SS1-B Tube and Single Braid / SS2-B Tube and Double Braid
Construction: Omega / Close Pitch
Tube Available: 304 / 316 Stainless Steel
Braid Available: 304 / 316 Stainless Steel
Size Available: 5" - 20"
(Larger sizes upon Request)
Max Temp: -276°C to 700°C

	Low	Med	High
Flexibility		●	
Cycle Life			●
Pressure Rating		●	
Chemical Resistance			●
Wall Thickness			●

Construction

Applicable Standards:
Corrugated Metal Hoses: ISO 10380
AGA Approved: AS 4631 (upon request)
Watermark Approved: WMTS 520 (upon request)
Welding Compliant: AS 4041- Class 1 (upon request)
Seismic Rated: AS 1170 (upon request)
Activfire Certified: AS 2118.1 (upon request)

Temperature Correction Factor																			
-200	-150	-100	-50	0	20	50	100	150	200	250	300	350	400	450	500	550	600	650	700
1.0	1.0	1.0	1.0	1.0	1.0	0.93	0.83	0.72	0.66	0.62	0.59	0.56	0.55	0.53	0.51	0.50	0.50	0.19	0.1

Omega

Nominal Dia.		Outside Dia. (mm)			Weight (Kg/m)			Min. Bend Radius (mm)		Working Pressure (kPa)			Burst Pressure (kPa)		
mm	inch	SSO	SS1	SS2	SS0	SS1	SS2	Static	Dynamic	SS0	SS1	SS2	SS0	SS1	SS2
125	5"	151	155	159	2.8	5	7.2	500	1200	200	1610	2455	800	6440	9820
150	6"	176	184	188	3.8	6.6	9.4	600	1500	200	1610	2455	800	6440	9820
200	8"	238	245	250	6.7	12	17.3	800	2000	200	1250	1975	800	5000	7900
250	10"	292	303	308	10.6	17	25	1000	2200	200	1022	1597	800	4088	6388
300	12"	345	365	370	17.1	20	26.5	1200	2500	200	815	1280	800	3260	5120
350	14"	400	415	420	20	24	29	1400	3000	200	805	1207	800	3220	4828
400	16"	460	465	470	22.8	28	33	1600	3500	200	600	1000	800	2400	4000
450	18"	500	502	504	40	50	60	2250	4500	100	500	800	400	2000	3200
500	20"	575	577	579	46	58	70	2500	5000	100	500	800	400	2000	3200
Higher pressure hoses can be designed on request															

Braided Braid (High Pressure)

Nominal Dia.		Outside Dia. (mm)			Weight (Kg/m)			Min. Bend Radius (mm)		Working Pressure (kPa)			Burst Pressure (kPa)		
mm	inch	SSO	SS1	SS2	SS0	SS1	SS2	Static	Dynamic	SS0	SS1	SS2	SS0	SS1	SS2
125	5"	151	158	165	2.8	5	7.2	500	1200	200	1935	2902	800	7740	11608
150	6"	176	187	194	3.8	7	9.4	600	1500	200	1800	2700	800	7200	10800
200	8"	238	248	256	6.7	12.5	18	800	2000	200	1613	2578	800	6452	10312
250	10"	292	306	314	10.6	18.1	25.8	1000	2200	200	1211	1937	800	4844	7748
300	12"	345	368	376	17.1	21	28	1200	2500	200	910	1456	800	3640	5824
350	14"	400	418	426	20	25	30	1400	3000	200	885	1416	800	3540	5664
400	16"	460	468	476	22.8	30.2	38	1600	3500	200	780	1170	800	3120	4680
450	18"	500	505	510	40	52	64	2250	4500	100	600	900	400	2400	3600
500	20"	575	580	585	46	60	74	2500	5000	100	550	825	400	2200	3300
Higher pressure hoses can be designed on request															

Stainless Steel Hose

VITALFLEX® - High Pressure

Part No.: SS0-HP Tube Only / SS1-HP Tube and Single Braid / SS2-HP Tube and Double Braid
Construction: Annular / Close Pitch / Heavy Wall
Tube Available: 304 / 316 / 321 Stainless Steel
Braid Available: 304 / 316 Stainless Steel
Size Available: 1/4" - 6"
Max Temp: -276°C to 700°C

	Low	Med	High
Flexibility		●	
Cycle Life			●
Pressure Rating			●
Chemical Resistance			●
Wall Thickness			●

Construction

Applicable Standards:
Corrugated Metal Hoses: ISO 10380
AGA Approved: AS 4631 (upon request)
Watermark Approved: WMTS 520 (upon request)
Welding Compliant: AS 4041- Class 1 (upon request)
Seismic Rated: AS 1170 (upon request)
Activfire Certified: AS 2118.1 (upon request)

Temperature Correction Factor																			
-200	-150	-100	-50	0	20	50	100	150	200	250	300	350	400	450	500	550	600	650	700
1.0	1.0	1.0	1.0	1.0	1.0	0.93	0.83	0.72	0.66	0.62	0.59	0.56	0.55	0.53	0.51	0.50	0.50	0.19	0.1

Nominal Dia.		Outside Dia. (mm)			Weight (Kg/m)			Min. Bend Radius (mm)		Working Pressure (kPa)			Burst Pressure (kPa)		
mm	inch	SSO	SS1	SS2	SS0	SS1	SS2	Static	Dynamic	SS0	SS1	SS2	SS0	SS1	SS2
6	1/4"	12.7	14.5	16.3	0.13	0.25	0.39	25.4	127	1242	17678	28283	4968	70712	113132
10	3/8"	17	18.8	20.6	0.19	0.37	0.54	31.8	139.7	690	10357	16567	2760	41428	66268
12	1/2"	20.8	23.4	25.9	0.58	0.94	1.29	38.1	203.2	552	15139	24219	2208	60556	96876
20	3/4"	30.7	33.3	35.8	0.71	1.18	1.64	50.8	203.2	483	9046	14476	1932	36184	57904
25	1"	38.1	40.6	43.2	1.18	1.79	2.40	76.2	228.6	276	7376	11799	1104	29504	47196
32	1 1/4"	47	50	53.3	1.52	2.47	3.42	82.6	254	228	7659	12254	912	30636	49016
40	1 1/2"	55.1	58.4	61.7	2.02	3.14	4.26	82.6	254	138	5989	9577	552	23956	38308
50	2"	63.8	67.1	70.1	2.38	3.81	5.24	136.7	292.1	104	5589	8942	416	22356	35768
65	2 1/2"	82	85.3	88.6	2.98	4.64	4.91	177.8	609.6	69	3988	6383	276	15952	25532
80	3"	96	99.3	102.4	4.42	6.58	8.74	190.5	711.2	69	3726	5962	276	14904	23848
100	4"	122.2	125.2	128.3	4.61	6.77	8.93	508	1016	55	2298	3678	220	9192	14712
150	6"	174.5	180.3	186.2	5.73	9.60	13.47	609.6	2413	35	1835	2933	140	7340	11732

Applications

Stainless Steel Hose

VITALFLEX® - Ultra High Pressure

Part No.: SS0-UHP Tube Only / SS1-UHP Tube and Single Braid / SS2-UHP Tube and Double Braid
Construction: Annular / Close Pitch / Heavy Wall
Tube Available: 316 Stainless Steel
Braid Available: 304 / 316 Stainless Steel
Size Available: 1/4" - 2"
Max Temp: -276°C to 700°C

	Low	Med	High
Flexibility	○	●	○
Cycle Life	○	○	●
Pressure Rating	○	○	●
Chemical Resistance	○	○	●
Wall Thickness	○	○	●

Construction

Applicable Standards:
Corrugated Metal Hoses: ISO 10380
AGA Approved: AS 4631 (upon request)
Watermark Approved: WMTS 520 (upon request)
Welding Compliant: AS 4041- Class 1 (upon request)
Seismic Rated: AS 1170 (upon request)
Activfire Certified: AS 2118.1 (upon request)

Temperature Correction Factor																			
-200	-150	-100	-50	0	20	50	100	150	200	250	300	350	400	450	500	550	600	650	700
1.0	1.0	1.0	1.0	1.0	1.0	0.93	0.83	0.72	0.66	0.62	0.59	0.56	0.55	0.53	0.51	0.50	0.50	0.19	0.1

Nominal Dia.		Outside Dia. (mm)			Weight (Kg/m)			Min. Bend Radius (mm)		Working Pressure (kPa)			Burst Pressure (kPa)		
mm	inch	SSO	SS1	SS2	SS0	SS1	SS2	Static	Dynamic	SS0	SS1	SS2	SS0	SS1	SS2
6	1/4"	12.7	14.7	16.3	0.30	0.42	0.54	304.8	152.4	1241	18988	30378	4964	75953	121513
10	3/8"	17.0	19.1	21.1	0.46	0.64	0.82	304.8	152.4	689	13245	21188	2758	52979	84750
12	1/2"	20.8	23.4	25.9	0.60	0.86	1.13	355.6	177.8	552	13748	22008	2206	54993	88032
20	3/4"	31.0	34.0	37.1	0.97	1.37	1.77	381	190.5	483	13748	22008	1931	54993	88032
25	1"	38.6	41.9	45.0	1.52	2.20	2.89	406.4	203.2	276	11025	17637	1103	44099	70547
32	1 1/4"	47.0	50.0	53.1	2.32	3.01	3.69	457.2	228.6	172	9080	14527	689	36322	58109
40	1 1/2"	55.6	58.7	61.7	2.99	3.94	4.91	482.6	241.3	138	7322	1107	552	29289	46829
50	2"	63.8	67.1	70.4	3.62	4.72	5.82	609.6	304.8	103	5805	9280	414	23222	37121

Applications

Stainless Steel Hose

VITALFLEX® - Extreme High Pressure

Part No.: SS3-EHP Tube and Triple Braid / SS4-EHP Tube and Quadruple Braid
Construction: Annular / Close Pitch / Heavy Wall
Tube Available: 316 Stainless Steel
Braid Available: 316 Stainless Steel
Size Available: 3″ - 4″
Max Temp: -276°C to 700°C

	Low	Med	High
Flexibility	●		
Cycle Life			●
Pressure Rating			●
Chemical Resistance			●
Wall Thickness			●

Construction

Applicable Standards:
Corrugated Metal Hoses: ISO 10380
AGA Approved: AS 4631 (upon request)
Watermark Approved: WMTS 520 (upon request)
Welding Compliant: AS 4041- Class 1 (upon request)
Seismic Rated: AS 1170 (upon request)
Activfire Certified: AS 2118.1 (upon request)

Temperature Correction Factor																			
-200	-150	-100	-50	0	20	50	100	150	200	250	300	350	400	450	500	550	600	650	700
1.0	1.0	1.0	1.0	1.0	1.0	0.93	0.83	0.72	0.66	0.62	0.59	0.56	0.55	0.53	0.51	0.50	0.50	0.19	0.1

Nominal Dia.		Braids	Outside Dia.	Weight	Min. Bend Radius (mm)		Working Pressure	Burst Pressure
mm	inch	No.	(mm)	(Kg/m)	Static	Dynamic	(kPa)	(kPa)
80	3″	3	107.2	12.95	812.8	2133.6	8618	34474
100	4"	4	133.9	15.60	1320.8	2444.8	8618	34474

Applications

QLD Ph: +617 5593 4292 | salesqld@hoseflex.com **WA** Ph: +618 9468 2840 | saleswa@hoseflex.com **VIC** Ph: +613 8566 7250 | salesvic@hoseflex.com

Monel Hose

VITALFLEX® - 400 Monel

Part No.: SS0-M Tube and Braid / SS1-M Tube and Single Braid / SS2-M Tube and Double Braid
Construction: Annular / Close Pitch / Heavy Wall
Tube Available: 400 Monel
Braid Available: 400 Monel
Size Available: 1/4" - 3"
Max Temp: -276°C to 700°C

	Low	Med	High
Flexibility		●	
Cycle Life		●	
Pressure Rating		●	
Chemical Resistance			●
Wall Thickness		●	

Construction

Applicable Standards:
Corrugated Metal Hoses: ISO 10380
AGA Approved: AS 4631 (upon request)
Watermark Approved: WMTS 520 (upon request)

Welding Compliant: AS 4041- Class 1 (upon request)
Seismic Rated: AS 1170 (upon request)
Activfire Certified: AS 2118.1 (upon request)
Chlorine Institute Pamphlet 6. Appendix A

Temperature Correction Factor												
-150	-100	-50	0	20	70	150	200	250	300	350	400	450
1.0	1.0	1.0	1.0	1.0	1.0	0.93	0.89	0.86	0.83	0.81	0.78	0.78

Nominal Dia.		Outside Dia. (mm)			Weight (Kg/m)			Min. Bend Radius (mm)		Working Pressure (kPa)			Burst Pressure (kPa)		
mm	inch	SSO	SS1	SS2	SS0	SS1	SS2	Static	Dynamic	SS0	SS1	SS2	SS0	SS1	SS2
3	1/4"	12.7	14.7	16.7	0.13	0.28	0.43	25.4	127	922	12975	20753	3688	51896	83033
12	1/2"	20.8	22.8	24.8	0.58	0.93	1.29	38.1	230.2	441	4833	7729	1644	19339	30909
20	3/4"	30.7	32.7	35.0	0.71	1.17	1.63	50.8	230.2	386	3736	5977	1544	14968	23917
25	1"	38.1	40.1	42.1	1.17	1.48	1.78	76.2	228.6	220	3199	5115	880	12803	20477
40	1 1/2"	55.6	57.6	59.6	1.24	1.90	2.55	101.6	304.8	110	2275	3640	440	9114	14561
50	2"	63.7	65.7	67.8	1.54	2.55	3.57	127	381	82	2178	3488	328	8728	13941
80	3"	96.0	98.5	101.0	1.80	3.03	4.26	228.6	558.8	55	1358	2164	220	5433	8673

* Monel hoses are manufactured and tested and are suitable for dry chlorine service which meets The Chlorine Institute-Piping System for Dry Chlorine Standard - Pamphlet 6 Edition 15

Alternative products:
Refer to Chlorine Transfer PTFE - Page 19

Applications

Hastelloy Hose

VITALFLEX® - 276 Hastelloy hose

Part No.: SS0-A Tube Only / SS1-A Tube and Single Braid / SS2-A Tube and Double Braid
Construction: Annular / Close Pitch
Tube Available: 276 Hastelloy
Braid Available: 276 Hastelloy
Size Available: 1/2" - 6"
Max Temp: -276°C to 700°C

	Low	Med	High
Flexibility	○	●	○
Cycle Life	○	○	●
Pressure Rating	○	●	○
Chemical Resistance	○	○	●
Wall Thickness	○	○	●

Construction

Applicable Standards:
Corrugated Metal Hoses: ISO 10380
AGA Approved: AS 4631 (upon request)
Watermark Approved: WMTS 520 (upon request)
Welding Compliant: AS 4041- Class 1 (upon request)
Seismic Rated: AS 1170 (upon request)
Activfire Certified: AS 2118.1 (upon request)

Temperature Correction Factor ISO 10380 (316L)																			
-200	-150	-100	-50	0	20	50	100	150	200	250	300	350	400	450	500	550	600	650	700
1.0	1.0	1.0	1.0	1.0	1.0	0.93	0.83	0.72	0.66	0.62	0.59	0.56	0.55	0.53	0.51	0.50	0.50	0.19	0.1

Annular

Nominal Dia.		Outside Dia. (mm)			Weight (Kg/m)			Min. Bend Radius(mm)		Working Pressure (kPa)			Burst Pressure (kPa)		
mm	inch	SSO	SS1	SS2	SS0	SS1	SS2	Static	Dynamic	SS0	SS1	SS2	SS0	SS1	SS2
12	1/2"	20.83	22.61	24.38	0.37	0.64	0.89	63.50	127.00	552	7412	11859	-	29654	47436
20	3/4"	30.73	32.51	34.29	0.64	1.03	1.43	76.20	152.40	483	5461	8736	-	21843	34950
25	1"	38.35	40.13	41.91	0.86	1.35	1.85	92.71	185.42	276	3937	6316	-	15755	25262
40	1 1/2"	55.63	57.91	60.20	1.37	2.19	3.01	109.22	218.44	138	3254	5206	-	13010	20829
50	2"	66.04	69.09	72.14	1.49	2.49	3.47	152.40	304.80	103	3558	5695	-	14231	22766
80	3"	96.01	98.55	101.09	1.80	3.32	4.85	228.60	558.80	69	2179	3489	-	8715	13941
100	4"	123.19	126.49	129.54	2.51	4.38	6.24	330.20	685.80	55	1600	2558	-	6391	10239
150	6"	174.50	180.34	186.18	5.16	7.81	10.46	482.60	914.40	34	1138	1820	-	4551	7281
200	8"	230.89	233.43	235.71	8.27	14.05	19.88	508.00	1016.00	41	1613	2579	-	6440	10308

Part Number Key:

SSABC-D-E

A:	**Braid quality required**	0 = no braid 1 = Single Braid 2 = Double Braid 3 = Triple Braid
B:	**Tube Material**	H0C276 = Hastelloy C276 Tube
C:	**Braid Material**	HBC276 = Hastelloy C276 Braid
D:	**Hose Type**	A = Annular, B = Braided Braid, O = Omega
E :	**Hose Size**	06 = 1/4", 10 = 3/8", 12= 1/2", 20= 3/4", 25 = 1", 32=1-1/4", 40 = 1-1/2"

Example: SS1HC276-A-40 = 1-1/2" Single Braided Annular Hastelloy C276 Hose, Hastelloy C276 Tube and Hastelloy C276 Braid
Example: SS2HC276-A-50 = 2" Double Braided Annular Hastelloy C276 Hose, Hastelloy C276 Tube and Hastelloy C276 Braid

Inconel Hose

VITALFLEX® - 625 Inconel

Part No.: SS0INCO-A Tube Only / SS1INCO-A Tube and Single Braid / SS2INCO-A Tube and Double Braid
Construction: Annular / Close Pitch
Tube Available: 625 Inconel
Braid Available: 625 Inconel
Size Available: 1/4" - 8"
Max Temp: -276°C to 700°C

	Low	Med	High
Flexibility		●	
Cycle Life			●
Pressure Rating		●	
Chemical Resistance			●
Wall Thickness			●

Construction

Applicable Standards:
Corrugated Metal Hoses: ISO 10380
AGA Approved: AS 4631 (upon request)
Watermark Approved: WMTS 520 (upon request)
Welding Compliant: AS 4041- Class 1 (upon request)
Seismic Rated: AS 1170 (upon request)
Activfire Certified: AS 2118.1 (upon request)

Temperature Correction Factor ISO 10380 (316L)																			
-200	-150	-100	-50	0	20	50	100	150	200	250	300	350	400	450	500	550	600	650	700
1.0	1.0	1.0	1.0	1.0	1.0	0.93	0.83	0.72	0.66	0.62	0.59	0.56	0.55	0.53	0.51	0.50	0.50	0.19	0.1

Annular

Nominal Dia.		Outside Dia. (mm)			Weight (Kg/m)			Min. Bend Radius(mm)		Working Pressure (kPa)			Burst Pressure (kPa)		
mm	inch	SSO	SS1	SS2	SS0	SS1	SS2	Static	Dynamic	SS0	SS1	SS2	SS0	SS1	SS2
6	1/4"	12.19	14.48	16.26	0.13	0.25	0.39	25.40	127.00	1241	14589	21546	-	58357	86184
10	3/8"	16.00	17.78	20.57	0.19	0.40	0.61	31.75	139.70	689	10349	16554	-	41396	66217
12	1/2"	20.83	22.61	24.38	0.34	0.58	0.80	38.10	152.40	552	7412	11859	-	29654	47436
20	3/4"	30.73	32.51	34.29	0.58	0.92	1.28	57.15	203.20	483	5461	8736	-	21843	34950
25	1"	38.35	40.13	41.91	0.79	1.18	1.56	69.85	228.60	276	3937	6302	-	15755	25193
32	1 1/4"	46.99	49.02	51.31	1.13	1.59	2.04	88.90	266.70	172	3661	5861	-	14651	23428
40	1 1/2"	55.63	57.91	60.20	1.25	1.92	2.59	101.60	304.80	138	3254	5206	-	13010	20829
50	2"	66.04	69.09	72.14	1.34	2.40	3.44	127.00	381.00	103	3558	5695	-	14231	22766
65	2 1/2"	82.04	84.58	87.12	1.73	2.99	4.24	203.20	508.00	83	2668	4268	-	10673	17078
80	3"	96.01	98.55	101.09	1.80	3.21	4.64	228.60	558.80	69	2179	3489	-	8715	13941
100	4"	123.19	126.49	129.54	2.51	3.99	5.98	330.20	685.80	55	1600	2558	-	6391	10239
150	6"	174.50	180.34	186.18	5.16	7.57	9.99	482.60	914.40	34	1138	1820	-	4551	7281
200	8"	230.89	233.43	235.71	8.27	14.11	19.94	508.00	1,016.00	41	1613	2579	-	6440	10308

Part Number Key:

SSABC-D-E

A:	**Braid quality required**	0 = no braid	1 = Single Braid 2 = Double Braid	3 = Triple Braid
B:	**Tube Material**	INCO = Tube	INCO = Tube	
C:	**Braid Material**	INCO = Braid	INCO = Braid	
D:	**Hose Type**	A = Annular,	B = Braided Braid,	O = Omega
E :	**Hose Size**	06 = 1/4", 10 = 3/8", 12= 1/2", 20= 3/4", 25 = 1", 32=1-1/4", 40 = 1-1/2"		

Example: SS1INCO-A-40 = 1-1/2" Single Braided Annular Hose, INCO Tube and Braid
Example: SS2INCO-A-50 = 2" Double Braided Annular Hose, INCO Tube and Braid

Pump Connectors

VITALFLEX® - Table 'E' M/S Fixed Flanges
VITALFLEX® - BSPT 304 S/S Hex Fixed Males

Part No.: SSPC
Construction: Omega / Close Pitch
Profile: Medium Flexibility / Medium Pressure
Tube Available: 304 / 316 Stainless Steel
Braid Available: 304 / 316 Stainless Steel
Size Available: 3/4" - 2"
(Larger sizes upon Request)
Max Temp: -276°C to 700°C

	Low	Med	High
Flexibility		●	
Cycle Life			●
Pressure Rating		●	
Chemical Resistance			●
Wall Thickness		●	

Construction

Vibration Eliminator / Pump Connector

Pump Connectors are flexible metal assemblies, primarily designed to isolate vibration from pumps on both the suction and discharge sides of the pump. They help to prevent damage caused by vibration, expansion and contraction. They accept thermal expansion and reduce piping stress due to minor misalignment. Constructed of stainless steel Omega corrugated metal and surrounded with a woven braid of high tensile stainless steel, these assemblies are flexible and are suitable to withstand high pressure and temperatures.

Applicable Standards:
Corrugated Metal Hoses: ISO 10380
AGA Approved: AS 4631 (upon request)
Watermark Approved: WMTS 520 (upon request)
Welding Compliant: AS 4041- Class 1 (upon request)
Seismic Rated: AS 1170 (upon request)
Activfire Certified: AS 2118.1 (upon request)

Specifications

S/S Pump Connector - Table 'E' M/S Fixed Flanges				
Part Number	**Size**	**Length**	**Working Pressure (kPa)**	**Burst Pressure (kPa)**
SSPC-50	2"	150mm	2501	10004
SSPC-65	2 1/2"	150mm	2501	8004
SSPC-80	3"	150mm	2001	8004
SSPC-100	4"	150mm	1601	6406
SSPC-125	5"	150mm	1508	6032
SSPC-150	6"	150mm	1508	6032
SSPC-200	8"	200mm	1201	4804
Custom sizes, lengths and end connections available on request. Please contact Pacific Hoseflex for more information				

S/S Pump Connector - BSPT 304 S/S Hex Fixed Males				
Part Number	**Size**	**Length**	**Working Pressure (kPa)**	**Burst Pressure (kPa)**
SSPC-22643	3/4"	255mm	5003	200012
SSPC-22644	1"	255mm	4002	16008
SSPC-22645	1 1/4"	255mm	3502	14008
SSPC-22646	1 1/2"	305mm	3502	12008
SSPC-22647	2"	330mm	2501	10004
Custom sizes, lengths and end connections available on request. Please contact Pacific Hoseflex for more information				

Vitalflex Hose - UHP-SILVERSNAKE®

Silversnake® Vitalflex®
Ultra High Pressure Gas Cylinder Hose

Part No.: SS2-A Tube and Double Braid
Construction: Heavy- Weight Mechanically formed Annular Hose
Tube Available: 304 / 316 Stainless Steel
Braid Available: 304 / 316 Stainless Steel
Size Available: 1/4"
Max Temp: -276°C to 700°C

	Low	Med	High
Flexibility			●
Cycle Life			●
Pressure Rating			●
Chemical Resistance			●
Wall Thickness			●

Construction

ISO 10380:2012

AS4041 Welding

Applicable Standards:
Corrugated Metal Hoses: ISO 10380
Welding Compliant: AS 4041- Class 1 (upon request)
Standard Lengths: 300mm to 5000mm lengths available
ISO 16964 - Gas cylinders - Flexible hoses assemblies - Specification and testing

Temperature Correction Factor ISO 10380 (316L)																			
-200	-150	-100	-50	0	20	50	100	150	200	250	300	350	400	450	500	550	600	650	700
1.0	1.0	1.0	1.0	1.0	1.0	0.93	0.83	0.72	0.66	0.62	0.59	0.56	0.55	0.53	0.51	0.50	0.50	0.19	0.1

Annular

Nominal Dia.		Outside Dia. (mm)	Weight (Kg/m)	Min. Bend Radius(mm)		Working Pressure		Burst Pressure	
mm	inch	SS2	SS2	Static	Dynamic	kPa	Bar	kPa	Bar
6	1/4"	13.20	0.50	124	140	28000	280	162000	1620

Applications

Stainless Steel Hose

VITALFLEX® - Bitumen Hose - Convoluted

	Low	Med	High
Flexibility		●	
Cycle Life		●	
Pressure Rating		●	
Chemical Resistance		●	
Wall Thickness		●	

Construction: Annular / Close Pitch
Profile: Medium Flexibility / Medium Pressure
Tube Available: 304 / 316 Stainless Steel
Cover Optional: Fiberglass Sleeve, Rope Lag, Galvanised Armor Wire
Size Available: 2 1/2"
Max Temp: -276°C to 700°C

Construction

Bitumen Hoses

- 2.5 to 3m - for most transfer in the field between sprayers and tankers
- 4 to 5m - for general storage facilities
- 6 to 7m for large storage facilities and areas in depots where access may be limited
- If a length excess of 7m is required, it is recommended that where possible, a combination of fixed pipe and a shorter length hose be used

Standards:
ADG-7
AS 2475
Corrugated Metal Hose: ISO 10380
AAPA HSEtE Guide No. 7

Specifications

Nominal Dia.		Outside Dia. (mm)			Weight (Kg/m)			Min. Bend Radius (mm)		Working Pressure (kPa)			Burst Pressure (kPa)		
mm	inch	SSO	SS1	SS2	SS0	SS1	SS2	Static	Dynamic	SS0	SS1	SS2	SS0	SS1	SS2
63	2 1/2"	79	82	85	1.41	2.70	3.99	280	650	294	2001	4002	294	8004	16008

Alternative products:
Convoluted Rope Lagged - Page 52
Bitumen Code Hose - Page 189
Spray Bar specification - Page 41
HYTAR Bitumen Fittings - Page 252

Applications

QLD Ph: +617 5593 4292 | salesqld@hoseflex.com **WA** Ph: +618 9468 2840 | saleswa@hoseflex.com **VIC** Ph: +613 8566 7250 | salesvic@hoseflex.com

Stainless Steel Hose - Convoluted Rope Lagged

VITALFLEX® - Convoluted Rope Lagged

Construction: Annular / Close Pitch
Profile: Medium Flexibility / Medium Pressure
Tube Available: 304 / 316 Stainless Steel
Cover: Three strand twisted sisal rope
Size Available: 6", 8" and 10"
Hose Max Temp: +200°C

	Low	Med	High
Flexibility		●	
Cycle Life		●	
Pressure Rating		●	
Chemical Resistance		●	
Wall Thickness		●	

Construction

Standards:
ADG-7
AS 2475
Corrugated Metal Hose: ISO 10380
AAPA HSEE Guide No. 7

Applications:
Dockside
Heavy Duty Ship Unloading

Specifications

Nominal Dia.		Weight (Kg/m)			Min. Bend Radius(mm)		Working Pressure (kPa)			Burst Pressure (kPa)		
mm	inch	SS0	SS1	SS2	Static	Dynamic	SS0	SS1	SS2	SS0	SS1	SS2
150	6"	5.19	7.11	9.04	482	914	34	1137	1820	136	4550	7280
200	8"	8.31	14.13	19.99	508	1016	41	1643	2578	164	6440	10307
250	10"	10.17	19.30	28.44	635	1270	35	1585	2530	140	6329	10128

Alternative products:
Bitumen Hose Convoluted - Page 51

Applications

Stainless Steel Hose - TTMA Drop Hose

VITALFLEX® - TTMA Drop Hose

	Low	Med	High
Flexibility			●
Cycle Life			●
Pressure Rating		●	
Chemical Resistance		●	
Wall Thickness		●	

Construction: Omega / Close Pitch
Profile: High Flexibility / Medium Pressure
Tube Available: 304 / 316 Stainless Steel
Cover Opitional: Fibreglass Sleeve, Rope Lag, PVC, Galvanised Armor Wire
Size Available: 3" - 4"
(Larger sizes upon Request)
Max Temp: -276°C to 700°C

Construction

Drop Hose

Standard Lengths 1800mm and 2000mm flexible drop hose with 4" TTMA flanged ends forms an important part of the overhead bottom loading arm. Generally supplied in flexible corrugated stainless steel for longevity they can also be supplied to code hose specification.

Standards
Corrugated Metal Hose: ISO 10380
AGA Approved: AS 4631 (upon requirement)
Welding Compliant: AS 4041- Class 1 (upon request)
Seismic Rated: AS 1170 (upon request)
Activfire Certified: AS 2118.1 (upon request)

Specifications

Nominal Dia.		Outside Dia. (mm)			Weight (Kg/m)			Min. Bend Radius (mm)		Working Pressure (kPa)			Burst Pressure (kPa)		
mm	inch	SSO	SS1	SS2	SS0	SS1	SS2	Static	Dynamic	SS0	SS1	SS2	SS0	SS1	SS2
80	3"	97	100	103	1.62	3.12	4.62	350	800	294	2001	3202	294	8004	12808
100	4"	122	125	128	2.00	3.70	5.40	400	1000	294	1601	2501	294	6404	10004

Alternative products:
Refer to Fire Safe Code Hose - Page 191

Applications

QLD Ph: +617 5593 4292 | salesqld@hoseflex.com **WA** Ph: +618 9468 2840 | saleswa@hoseflex.com **VIC** Ph: +613 8566 7250 | salesvic@hoseflex.com

Stainless Steel Hose

VITALFLEX® - Oxygen Lance hose

Omega Part No.: SS0-O Tube Only / SS1-O Tube and Single Braid / SS2-O Tube and Double Braid
Braided Braid Part No.: SS0-B Tube Only / SS1-B Tube and Single Braid / SS2-B Tube and Double Braid
Construction: Omega / Close Pitch
Tube Available: 304 / 316 Stainless Steel
Braid Available: 304 / 316 Stainless Steel
Size Available: 5" - 20"
(Larger sizes upon Request)
Max Temp: -276°C to 700°C

	Low	Med	High
Flexibility		●	
Cycle Life			●
Pressure Rating		●	
Chemical Resistance			●
Wall Thickness			●

Construction

Applicable Standards:
Corrugated Metal Hoses: ISO 10380
AGA Approved: AS 4631 (upon request)
Watermark Approved: WMTS 520 (upon request)
Welding Compliant: AS 4041- Class 1 (upon request)
Seismic Rated: AS 1170 (upon request)
Activfire Certified: AS 2118.1 (upon request)

Temperature Correction Factor																			
-200	-150	-100	-50	0	20	50	100	150	200	250	300	350	400	450	500	550	600	650	700
1.0	1.0	1.0	1.0	1.0	1.0	0.93	0.83	0.72	0.66	0.62	0.59	0.56	0.55	0.53	0.51	0.50	0.50	0.19	0.1

Omega

Nominal Dia.		Outside Dia. (mm)			Weight (Kg/m)			Min. Bend Radius (mm)		Working Pressure (kPa)			Burst Pressure (kPa)		
mm	inch	SSO	SS1	SS2	SS0	SS1	SS2	Static	Dynamic	SS0	SS1	SS2	SS0	SS1	SS2
125	5"	151	155	159	2.8	5	7.2	500	1200	200	1610	2455	800	6440	9820
150	6"	176	184	188	3.8	6.6	9.4	600	1500	200	1610	2455	800	6440	9820
200	8"	238	245	250	6.7	12	17.3	800	2000	200	1250	1975	800	5000	7900
250	10"	292	303	308	10.6	17	25	1000	2200	200	1022	1597	800	4088	6388
300	12"	345	365	370	17.1	20	26.5	1200	2500	200	815	1280	800	3260	5120
350	14"	400	415	420	20	24	29	1400	3000	200	805	1207	800	3220	4828
400	16"	460	465	470	22.8	28	33	1600	3500	200	600	1000	800	2400	4000
450	18"	500	502	504	40	50	60	2250	4500	100	500	800	400	2000	3200
500	20"	575	577	579	46	58	70	2500	5000	100	500	800	400	2000	3200
Higher pressure hoses can be designed on request															

All parts come in contact with Oxygen of stainless steel are remain oil and grease free.
An additional mechanical protection can be achieved by use of an outer interlock profile hose. Inner liner (interlock hose) is predominantly used for the oxygen supply to improve the flow condition and reducer the pressure loss.

Application:
In steel production, the pig iron produced in a blast furnace, and oxygen is lanced onto this molten iron at regular intervals. This encourage combustion of excess carbon and part of unwanted companion elements.

The movements of lance hose over several meters in a vertical as well as a horizontal direction is made possible by flexible lance hose which are installed in 180 degree bend position (also know as a travelling loop).

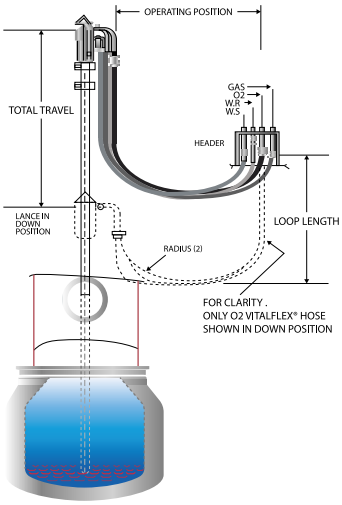

Stripwound Hose

Light Weight Engine Exhaust Interlock

Part No.: EEI4S
Construction: Unpacked
Profile: Medium Flexibility / Medium Pressure
Tube Available: 304 Stainless Steel
Size Available: 3/4" - 12"
(Larger sizes upon Request)
Max Temp: 700°C
Lengths: Min 3mtrs, supplied in 3mtr increments

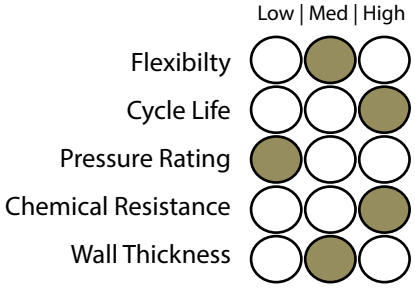

Construction

Typical applications include commercial vehicle, passenger vehicle plus plant and portable generator set exhaust systems. This is a general purpose flexible metallic light weight conduit designed for a variety of installations requiring motion, vibration and bending.

Part Number	Size	I.D. (mm)	O.D. (mm)	Bend Radius (mm)
EEI4S-20	3/4"	19	22.0	140
EEI4S-25	1"	25	28.0	152
EEI4S-32	1 1/4"	32	36.0	160
EEI4S-38	1 1/2"	38	41.3	166
EEI4S-41	1 5/8"	41	44.3	180
EEI4S-45	1 3/4"	44	47.3	190
EEI4S-48	1 7/8"	48	51.3	195
EEI4S-50	2"	51	54.3	205
EEI4S-54	2 1/4"	57	60.3	235
EEI4S-63	2 1/2"	63	66.3	260
EEI4S-70	2 3/4"	70	73.3	285
EEI4S-80	3"	76	79.3	205
EEI4S-90	3 1/2"	90	94.2	250
EEI4S-100	4"	102	106.2	370
EEI4S-114	4 1/2"	114	118.2	490
EEI4S-125	5"	127	131.2	515
EEI4S-140	5 1/2"	140	144.2	600
EEI4S-150	6"	152	156.2	655
EEI4S-175	7"	178	183.0	740
EEI4S-200	8"	203	208.0	800
EEI4S-225	9"	230	234.0	950
EEI4S-250	10"	254	259.0	1100
EEI4S-300	12"	305	310.0	1400

Applications

QLD Ph: +617 5593 4292 | salesqld@hoseflex.com **WA** Ph: +618 9468 2840 | saleswa@hoseflex.com **VIC** Ph: +613 8566 7250 | salesvic@hoseflex.com

Stripwound Hose

Material Handling Lined Interlock

Part No.: MHI4S
Construction: Unpacked / Liner
Profile: Medium Flexibility / Medium Pressure
Tube Available: 304 Stainless Steel
Size Available: 1 1/4' - 10"
(Larger sizes upon Request)
Max Temp: 700°C
Lengths: Min 3mtrs, supplied in 3mtr increments

	Low	Med	High
Flexibility	○	●	○
Cycle Life	○	○	●
Pressure Rating	●	○	○
Chemical Resistance	○	○	●
Wall Thickness	○	●	○

Construction

The interlock is specially wound into a double interlock hose from two separate metal strips. The double interlock hose is manufactured for the purpose of producing a liner to create a moderately smooth inner bore. The inner will provide a higher flow rate giving the hose a variety of advantages such as nil air loss from its tighter construction, elimination of materials degradation and contamination experienced with other hoses, as well as a longer service life due to greater abrasion resistance.

Applications may include large volume transfer of dry bulk materials, difficult to fluidize materials in industrial plants, ships, barges, silos, elevators, trucks and rail units. Uses include pneumatic transfer of bulk materials in powder, pellet, granules, flake or pebble form such as chemicals, feed, flour, grain, plastics, sugar, cement, pebble and lime.

Part Number	Size	I.D. (mm)	O.D. (mm)	Bend Radius (mm)
MHI4S-32	1 1/4"	32	36	203
MHI4S-40	1 1/2"	38	42	255
MHI4S-50	2"	51	55	355
MHI4S-54	2 1/4"	57	61	368
MHI4S-63	2 1/2"	63	67	381
MHI4S-80	3"	76	81	406
MHI4S-90	3 1/2"	95	100	432
MHI4S-100	4"	102	107	457
MHI4S-125	5"	127	132	559
MHI4S-150	6"	152	158	635
MHI4S-200	8"	200	210	900
MHI4S-250	10"	250	261	1200

Applications

Vacuum Jacketed Hoses

These maintenance-free and durable cryogenic transfer lines are designed for use with cryogenic liquids and gases. Even with the extremely low temperatures below -150°C flowing through the hose, the outer surface remains at room temperature, ensuring safety when touched with bare hands. The reduced liquid and gas consumption of these hoses translates to cost savings for your business.

Vitalflex Vacuum Jacketed (VVJ) hoses incorporate cutting-edge super insulation technology, guaranteeing optimal thermal efficiency. VVJ products come in two options for vacuum insulation: static and dynamic vacuum types.

Thanks to the coaxial bellow construction, these hoses offer exceptional flexibility, allowing for easy manoeuvrability. Additionally, the use of lightweight stainless steel materials minimizes cool-down loss to an absolute minimum. To further protect the vacuum jacketed hoses, they are encased in a stainless steel spiral wrap or a braided outer cover, ensuring durability and longevity.

On top of that, (VVJ) conditioning equipment comes with advanced close tolerance bayonet connections that guarantee frost and condensation-free operation, with the lowest heat leaks, preserving your cryogenic fluid at the lowest temperature and ensuring pressure stability. Vacuum Jacketed Transfer hoses are the epitome of thermal efficiency in transfer hoses, designed specifically to minimize and reduce loss of containment during operation.

Our lightweight inner tubing significantly reduces cooldown losses, enabling rapid hose cooldown and accelerating the delivery of cryogenic liquid to the desired point of use.

By utilizing our Vacuum Jacketed Transfer Hose, you can expect higher quality liquid with lower gas content at the point of use, thereby enhancing equipment efficiency.

- Ranging from semi-flexible to ultra-flexible to suit your type of application
- Hazardous ice & dripping water is reduced or eliminated, increasing safety.
- Outer surface is safe to the touch, even when used with liquid hydrogen or liquid helium.
- Interlocking stainless steel cover provides a light weight, durable, and flexible product.
- Each transfer hose is flow and leak tested to ensure superior quality.
- Standard lengths and end fittings are maintained in-stock for quick delivery.
- Custom configurations are also available.

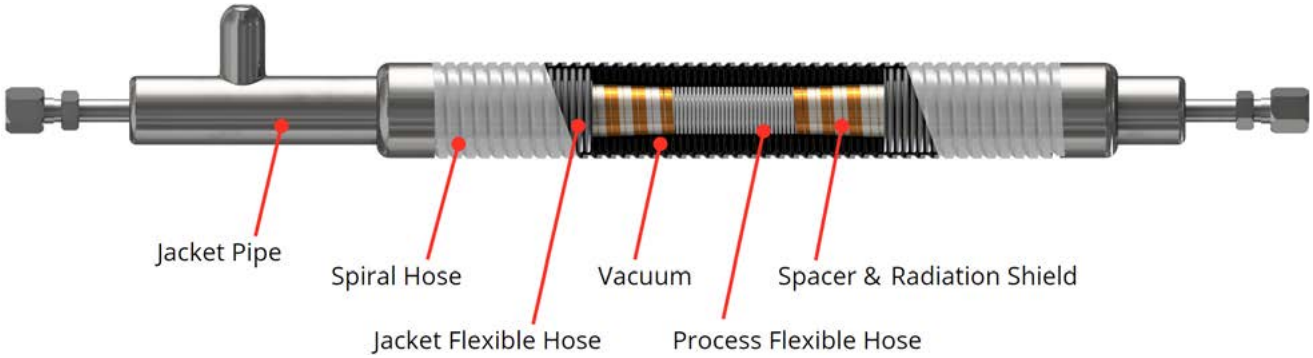

Options & Accessories

- Integrated vacuum jacketed tees and elbows
- Bayonet connections
- Vacuum jacketed shut-off valves
- Pressure relief valve assemblies
- Sintered metal diffusers (phase separators)
- High pressure ratings available upon request

Applications

- Electronic and Semiconductor
- Medical and Pharmaceutical
- Laboratory and Biotechnology
- Food and Beverage
- Aerospace
- Industrial

Mediums

- Hydrogen
- Helium
- Nitrogen
- Argon
- Oxygen
- Methane
- Propane

Vitalflex Vacuum Jacketed (VVJ) VJ-Flex Hose Application Benefits

Reusability

Pre-engineered modular concept allows the vacuum insulated transfer hose to be easily reuse if use-point locations and plant layout is changed

Cost Saving

This option provides simplicity and cost saving as it reduces the necessity for precise system layout measurements

Time Saving

Readily available on the shelf for fast delivery, thus reduces material lead time for your cryogenic piping project

Vacuum Jacketed Hoses

Vitalflex Vacuum Jacketed (VVJ) provide transfer hoses with various flexibility to suit different piping needs and applications. All hoses comes with static vacuum as standard and dynamic vacuum as option. Static vacuum hose is vacuum sealed at the factory, providing many years of trouble free vacuum insulation. All hoses comes with high quality wear resistant stainless steel outer braid or kink resistant spiral wrap protection cover.

Vacuum Jacketed Semi (VVJS)

Pre-engineered modular vacuum insulated Vitalflex Vacuum Jacketed (VVJ) hose has added advantage over the traditional hoses, especially when piping system reconfiguration is frequently done. Vacuum jacketed hose can be added if required to the existing system without major rework expenses.

Vacuum Jacketed Cryo (VVJC)

Flexible transfer hose mainly used to overcome misalignment in rigid piping system; and as a final tie-in from rigid piping to equipment such as bulk tank & process equipment.

VITALFLEX® - Vacuum Jacketed Ultra (VVJU)

Offers high flexibility, sturdy & kink-resistant spiral wrap outer jacket, suitable for rough handling usage such as cryogenic liquid cylinder (LGC / dewar) refilling; and liquid withdrawal from pressurized dewar to test handler.

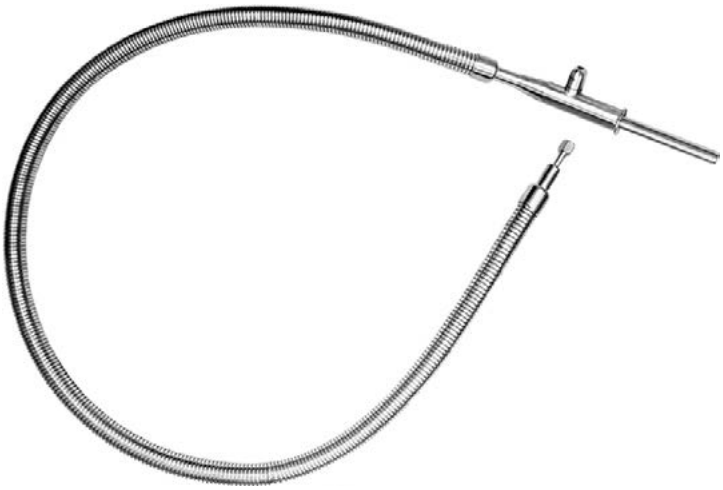

VITALFLEX® - Vacuum Jacketed Semi (VVJS)

	Low	Med	High
Flexibility	○	○	●
Cycle Life	○	●	○
Pressure Rating	○	●	○
Chemical Resistance	○	○	●
Wall Thickness	○	●	○

Construction: SS1-A Tube and Single Braid / SS2-A Tube and Double Braid
Profile: Annular / Close Pitch
Tube Available: 300 / 304 / 316 Stainless Steel /
Cover options: 300 / 304 / 316 Stainless Steel /
Size Available: 5/8" - 2"
(Larger sizes upon Request)
Max Temp: -196°C to 700°C

Construction

Vacuum Jacketed Semi (VVJS) is a semi-rigid bendable pipe with optimal flexibility is suitable for long distance piping system application, an alternative to traditional rigid piping. It's lightweight stainless steel construction reduces cool-down losses to an absolute minimum.

The VVJS hoses are protected by a high quality and wear resistant stainless steel braided outer covering. Typical hoses are manufactured with pipe thread ends or bayonet connection.

These hoses are used in a wide variety of applications as main transfer hose for LN2 such as food freezing, semiconductor test handlers, MBE and LN2 dosing applications.

Specifications

Part Number	Inner Dia (mm)	Outer Dia (mm)	"Steady State Heat Leak (watts/hr)"	"Bayonet heat leak (watts)"	Bend Radius (mm)	Working Pressure (kPa)
VVJS-16	16.2	52.1	1.3	1.2	300	1380
VVJS-25	25.1	62.8	1.4	2.4	400	1380
VVJS-32	34.2	81.2	1.5	2.4	450	1380
VVSJ-40	40	120	1.7	2.7	600	1380
VVSJ-50	50.1	120	1.6	3.3	720	1380

Optional manufacturing options: Pneumatic pressure test, Vacuum retention testing, LN2 cold shock, pre-material certs., X-ray, ASME B31.3 certification, CFOS cleaning for O2 services
End couplings available: Bayonet, threaded, flanged

Stainless Steel Hose

VITALFLEX® - Vacuum Jacketed Cryo (VVJC)

	Low	Med	High
Flexibility	○	○	●
Cycle Life	○	●	○
Pressure Rating	○	●	○
Chemical Resistance	○	○	●
Wall Thickness	○	●	○

Construction: SS1-A Tube and Single Braid / SS2-A Tube and Double Braid
Profile: Annular / Close Pitch
Tube Available: 300 / 304 / 316 Stainless Steel /
Cover options: 300 / 304 / 316 Stainless Steel /
Size Available: 5/8" - 2"
(Larger sizes upon Request)
Max Temp: -196°C to 700°C

Construction

Vacuum Jacketed Cryo (VVJC) hoses are a vacuum insulated stainless steel flexible hose designed to meet high flow capacity without compromising its flexibility. Engineered as modular section with close tolerance bayonet connections. It can be used on its own, or as part of StatiRigid sections for misalignment offset. VVJC pipe is evacuated and sealed at the factory as a static vacuum and is available in dynamic vacuum. VVJC are available in wide variety of sizes from DN16 up to DN50 to meet most the standard or custom requirements.

Vitalflex Vacuum Jacketed (VVJC) offers a complete line of components such as inline venting devices, phase separators and gas traps to maximize the system performance. VVJC is used in a wide variety of applications including biotech, cryogenic storage, food and beverage, nanotech, environmental temperature chambers and R&D applications.

Specifications

Part Number	Inner Dia (mm)	Outer Dia (mm)	"Steady State Heat Leak (watts/hr)"	"Bayonet heat leak (watts)"	Bend Radius (mm)	Working Pressure (kPa)
VVJC-16	16.2	52.1	1.3	1.2	200	1380
VVJC-25	25.1	62.8	1.4	2.4	300	1380
VVJC-32	34.2	81.2	1.5	2.4	450	1380
VVJC-40	40	120	1.7	2.7	600	1380
VVJC-50	50.1	120	1.6	3.3	720	1380

Optional: Pneumatic pressure test, Vacuum retention testing, LN2 cold shock, pre-material certs., X-ray, ASME B31.3 certification, CFOS cleaning for O2 services
End couplings available: Bayonet, threaded, flanged

Stainless Steel Hose

VITALFLEX® - Vacuum Jacketed Ultra (VVJU)

	Low	Med	High
Flexibility			●
Cycle Life		●	
Pressure Rating		●	
Chemical Resistance			●
Wall Thickness		●	

Construction: SS1-A Tube and Single Braid / SS2-A Tube and Double Braid
Profile: Annular / Close Pitch
Tube Available: 300 / 304 / 316 Stainless Steel /
Cover options: 300 / 304 / 316 Stainless Steel /
Size Available: 5/8" - 2"
(Larger sizes upon Request)
Max Temp: -196°C to 700°C

Construction

Ultra-Flex transfer hose is a ultra-flexible, vacuum insulated LN2 transfer hose with high flexibility. It has the lowest dynamic bend radius among all cryogenic hoses in the market. Due to its lightweight stainless steel construction, cool-down loss can be reduced to an absolute minimum.

Ultra-Flex hoses are protected by a tough and antikink stainless steel spiral wrap outer covering, its non wire braid prevent potential operator injury due to sharp wire found in traditional braided sleeve. Typical hoses are manufactured with pipe thread ends or female flare 1/2" JIC/CGA fittings or C5 bayonet.

These hoses are used in a wide variety of applications including tool connections with portable dewars supplying LN2 to test handlers, LN2 doser, or any moving reservoirs and custom OEM applications.

Specifications

Part Number	Inner Dia (mm)	Outer Dia (mm)	"Steady State Heat Leak (watts/hr)"	"Bayonet heat leak (watts)"	Bend Radius Static (mm)	Bend Radius Dynamic (mm)	Working Pressure (kPa)
VVJU-08	8.2	39	2.6	1.2	152	203	1030
VVJU-12	12.1	49	3	1.2	203	254	1030

Optional: Pneumatic pressure test, Vacuum retention testing, LN2 cold shock, pre-material certs., X-ray, ASME B31.3 certification, CFOS cleaning for O2 services
End couplings available: Bayonet, threaded, flanged

Stainless Steel Hose

Vacuum Jacketed Pipes (VJP)

	Low	Med	High
Flexibility	●	○	○
Cycle Life	○	●	○
Pressure Rating	○	●	○
Chemical Resistance	○	○	●
Wall Thickness	○	○	●

Construction: Coaxial stainless steel pipe
Profile: Combination smooth inner pipe with convoluted bellow
Tube Available: 304 / 316 Stainless Steel
Cover options: Radiation Shield
Size Available: 3/4" - 3"
(Larger sizes upon Request)

Construction

Engineered as modular sections, these stainless steel coaxial vacuum insulated piping spools are joined together with close tolerance bayonet connections, forming a complete cryogenic transfer system. Each section is evacuated, sealed and tested for vacuum integrity to ensure minimal heat gain.

Vacuum Jacketed Pipes (VJP) come with internal bellows at required intervals to serve as thermal expansion compensators according to EJMA calculation. The pipe comes with smooth inner bore to minimize pressure drop and improve flow characteristics. Installation for VJP can be done easily both indoor and outdoor, by incorporating flexible sections strategically to offset misalignments. VJP offers a complete line of components including in-line venting devices, phase separators and gas traps to maximize the cryogenic system performance.

Specifications

Part Number	Inner pipe Dia (mm)	Outer Jacket Pipe Dia (mm)	Actual internal flow Dia (mm)	Hole Required to Accommodate Pump Out (mm)	Bayonet Clamp OD (mm)
VJP-5T	19.05	60.3	16.6	100	51
VJP-5P	21.3	60.3	18	100	65
VJP-10T	29	73	26.6	120	65
VJP-10P	33.4	88.9	30	120	78
VJP-15P	48.3	101.6	45	150	91
VJP-20P	60.3	101.6	57	180	120
VJP-30P	88.9	141.3	85	200	145

Stainless Steel Hose and Fittings

Hose Part Numbers:
SSABC-D-E

A:	**Braid quality required**	0 = no braid	1 = Single Braid	2 = Double Braid	3 = Triple Braid
B:	**Tube Material**	6S = 316 Tube	4S = 304 Tube		
C:	**Braid Material**	6S = 316 Braid	4S = 304 Braid		
D:	**Hose Type**	A = Annular,	B = Braided Braid,	O = Omega	
E :	**Hose Size**	06 = 1/4", 10 = 3/8", 12= 1/2", 20= 3/4", 25 = 1", 32=1-1/4", 40 = 1-1/2"			

Example: SS16S4S-A-40 = 1-1/2" Single Braided Annular Stainless Steel Hose, 316 Tube and 304 Braid

Example: SS26S6S-A-50 = 2" Double Braided Annular Stainless Steel Hose, 316 Tube and 316 Braid

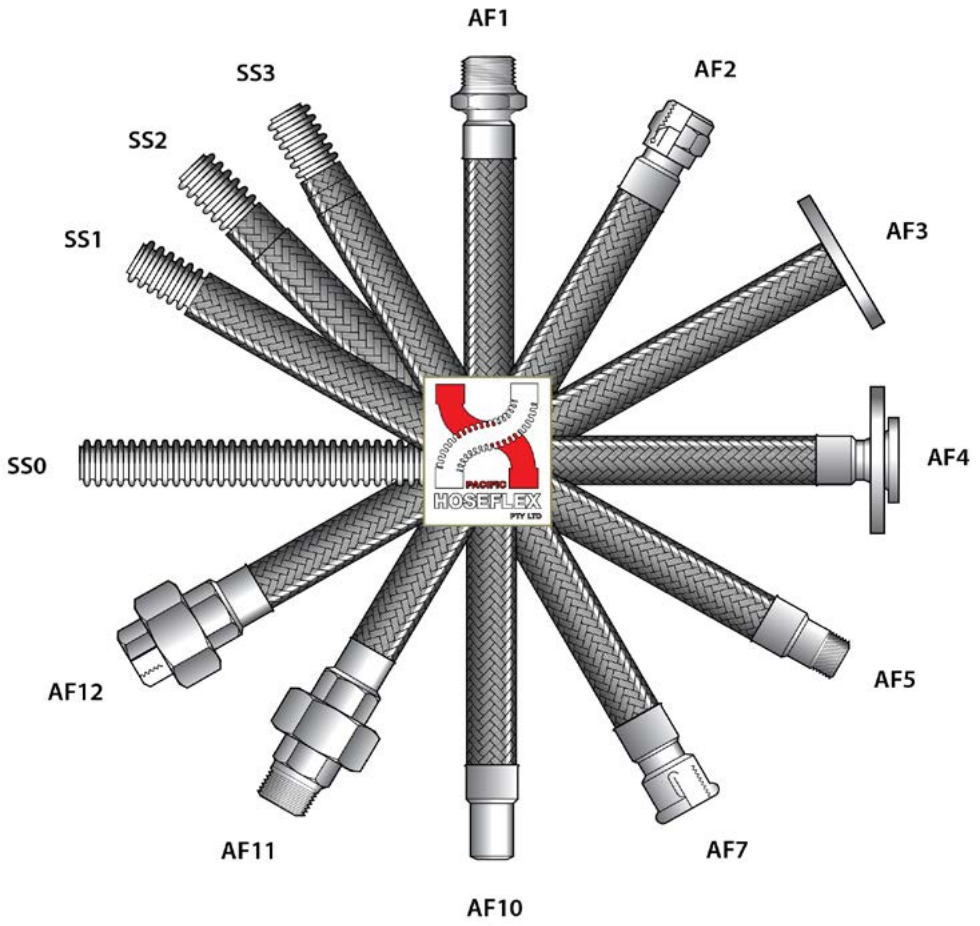

Fitting Part Numbers:

AF1 - Fixed Hex Male
AF2 - Swivel Female
AF3 - Fixed Flange
AF4 - Swivel Flange
AF5 - Toe Nipple
AF7 - Fixed Female Socket
AF10 - Welded Pipe End
AF11 - Male Union
AF12 - Female Union
SS0 - Convoluted hose
SS1 - Convoluted hose + Single Braid
SS2 - Convoluted hose + Double Braid
SS3 - Convoluted hose + Triple Braid

QLD Ph: +617 5593 4292 | salesqld@hoseflex.com **WA** Ph: +618 9468 2840 | saleswa@hoseflex.com **VIC** Ph: +613 8566 7250 | salesvic@hoseflex.com