PACIFIC
HOSEFLEX
PTY LTD

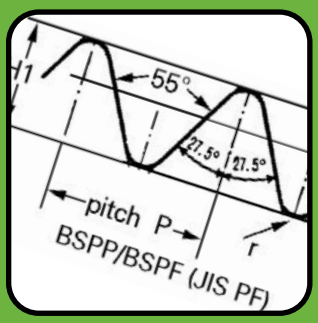

09

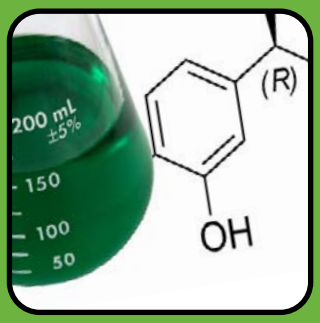

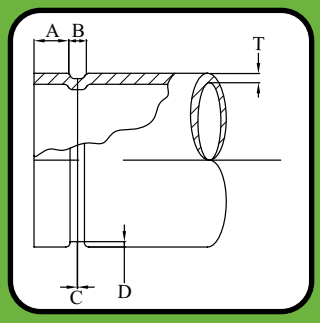

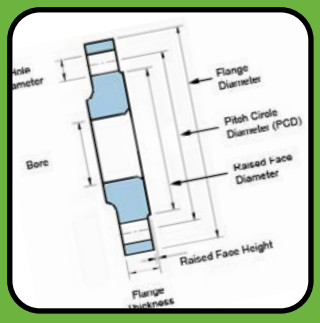

TECHNICAL DATA

10.01 Flange Specification (AS 2129)

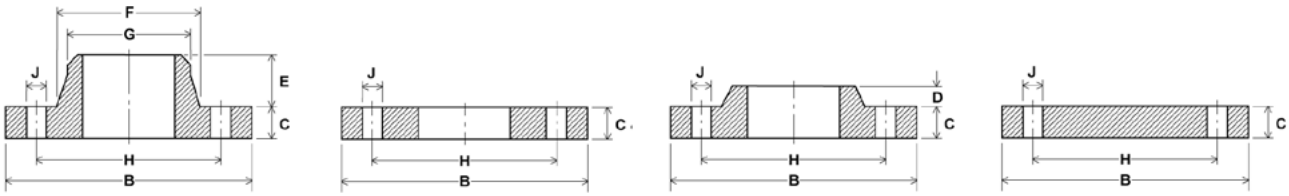

WELDING NECK | PLATE SLIP-ON WELDING | BOSSED | BLANK

TABLE D

Nominal Pipe Size		Outside Diameter of Pipe	Flange Outside Diameter	Thickness of Flange		Length Through Hub		Diameter at Large End of Neck	Diameter at Small End of Neck	Drilling Data		
				Copper Alloy	Plate or Forged	Length of Boss	Length of Welding Neck			Bolt Circle Diameter	Diameter of Bolt Holes	Number of Bolts
mm	inch	A	B	C	C	D	E	F	G	H	J	K
15	1/2"	21.3	95	6	5	10	22	27	22	67	14	4
20	3/4"	26.7	100	6	5	11	22	33	27	73	14	4
25	1"	33.4	115	8	5	11	22	43	34	83	14	4
32	1 1/4"	42.2	120	8	6	11	26	49	43	87	14	4
40	1 1/2"	48.3	135	10	6	13	29	59	49	98	14	4
50	2"	60.3	150	10	8	13	29	70	61	114	19	4
65	2 1/2"	73	165	11	8	16	32	83	76	127	19	4
80	3"	88.9	185	13	10	16	35	102	89	146	19	4
100	4"	114.3	215	16	10	19	41	130	115	178	19	4
125	5"	141.3	255	17	13	19	44	152	142	210	19	8
150	6"	168.3	280	17	13	19	48	187	169	235	19	8
200	8"	219.1	335	19	13	22	51	241	220	292	19	8
250	10"	273.8	405	19	16	27	64	292	274	356	22	8
300	12"	323.8	455	22	19	29	70	343	324	406	22	12
350	14"	355.6	525	25	22	-	73	387	356	470	26	12
400	16"	406.4	580	25	22	-	-	-	-	521	26	12
450	18"	457	640	29	25	-	-	-	-	584	26	12
500	20"	508	705	32	29	-	-	-	-	641	26	16
600	24"	610	825	35	32	-	-	-	-	756	30	16

Note:
- Dimensions are in (mm)
- Larger sizes available on request
- Thickness dimension include raised face
- Available with or without raised face
- Pipe diameter to ANSI standard
- Bore to suit customers pipe

10.02 Flange Specification (AS 2129)

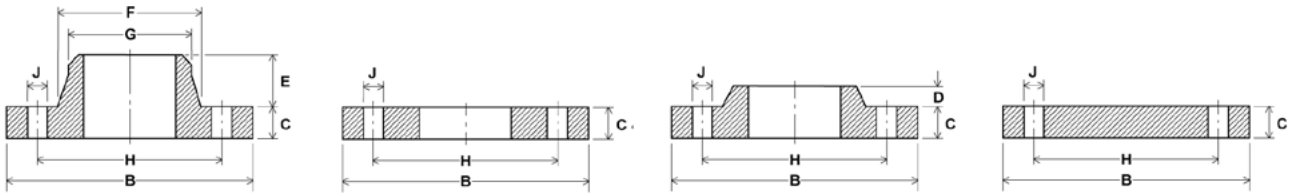

WELDING NECK PLATE SLIP-ON WELDING BOSSED BLANK

TABLE E

Nominal Pipe Size		Outside Diameter of Pipe	Flange Outside Diameter	Thickness of Flange		Length Through Hub		Diameter at Large End of Neck	Diameter at Small End of Neck	Drilling Data		
				Copper Alloy	Plate or Forged	Length of Boss	Length of Welding Neck			Bolt Circle Diameter	Diameter of Bolt Holes	Number of Bolts
mm	inch	A	B	C	C	D	E	F	G	H	J	K
15	1/2"	21.3	95	6	6	10	22	27	22	67	14	4
20	3/4"	26.7	100	6	6	11	22	33	27	73	14	4
25	1"	33.4	115	8	7	11	22	43	34	83	14	4
32	1 1/4"	42.2	120	8	8	11	26	49	43	87	14	4
40	1 1/2"	48.3	135	10	9	13	29	59	49	98	14	4
50	2"	60.3	150	10	10	13	29	70	61	114	18	4
65	2 1/2"	73	165	11	10	16	32	83	76	127	18	4
80	3"	88.9	185	13	11	16	35	102	89	146	18	4
100	4"	114.3	215	16	13	19	41	130	115	178	18	8
125	5"	141.3	255	17	14	19	44	152	142	210	18	8
150	6"	168.3	280	17	17	19	48	184	169	235	22	8
200	8"	219.1	335	19	19	22	51	241	220	292	22	8
250	10"	273.8	405	25	22	27	64	292	274	356	22	12
300	12"	323.8	455	28	25	29	70	343	324	406	26	12
350	14"	355.6	525	32	29	-	73	387	356	470	26	12
400	16"	406.4	580	32	32	-	-	-	-	521	26	12
450	18"	457	640	35	35	-	-	-	-	584	26	16
500	20"	508	705	38	38	-	-	-	-	641	26	16
600	24"	610	825	48	48	-	-	-	-	756	33	16

Note:
- Dimensions are in (mm)
- Larger sizes available on request
- Thickness dimension include raised face
- Available with or without raised face
- Pipe diameter to ANSI standard
- Bore to suit customers pipe

10.03 Flange Specification (AS 2129)

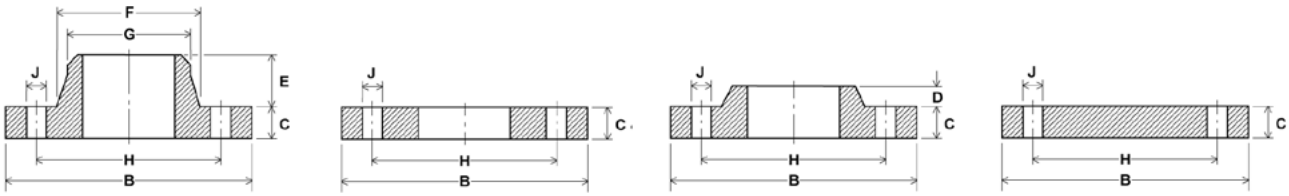

WELDING NECK | PLATE SLIP-ON WELDING | BOSSED | BLANK

TABLE F

Nominal Pipe Size		Outside Diameter of Pipe	Flange Outside Diameter	Thickness of Flange		Length Through Hub		Diameter at Large End of Neck	Diameter at Small End of Neck	Drilling Data		
				Copper Alloy	Plate or Forged	Length of Boss	Length of Welding Neck			Bolt Circle Diameter	Diameter of Bolt Holes	Number of Bolts
mm	inch	A	B	C	C	D	E	F	G	H	J	K
15	1/2"	21.3	95	8	10	10	22	27	22	67	14	4
20	3/4"	26.7	100	8	10	11	22	33	27	73	14	4
25	1"	33.4	120	10	10	11	29	43	34	87	18	4
32	1 1/4"	42.2	135	10	13	11	35	52	43	98	18	4
40	1 1/2"	48.3	140	11	13	13	35	59	49	105	18	4
50	2"	60.3	165	11	16	13	35	70	61	127	18	4
65	2 1/2"	73	185	13	16	16	38	86	76	146	18	8
80	3"	88.9	205	14	16	16	44	102	89	165	18	8
100	4"	114.3	230	17	19	19	51	130	115	191	18	8
125	5"	141.3	280	19	22	19	57	159	142	235	22	8
150	6"	168.3	305	22	22	19	57	184	169	260	22	12
200	8"	219.1	370	25	25	22	67	241	220	324	22	12
250	10"	273.8	430	25	29	27	73	298	274	381	26	12
300	12"	323.8	490	29	32	29	79	352	324	438	26	16
350	14"	355.6	550	32	35	-	86	387	356	495	30	16
400	16"	406.4	610	32	41	-	-	-	-	552	30	20
450	18"	457	675	35	44	-	-	-	-	610	33	20
500	20"	508	735	38	51	-	-	-	-	673	33	24
600	24"	610	850	41	57	-	-	-	-	781	36	24

Note:
- Dimensions are in (mm)
- Larger sizes available on request
- Thickness dimension include raised face
- Available with or without raised face
- Pipe diameter to ANSI standard
- Bore to suit customers pipe

10.04 Flange Specification (AS 2129)

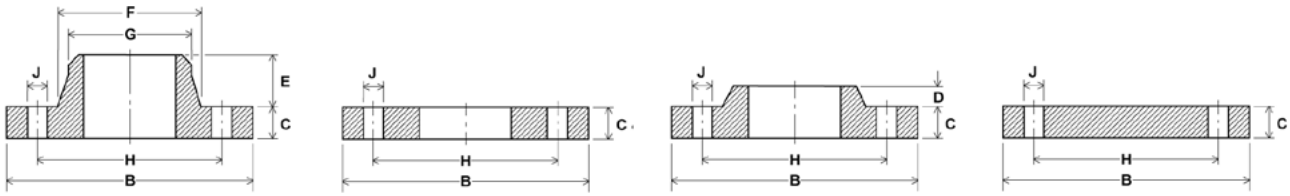

WELDING NECK PLATE SLIP-ON WELDING BOSSED BLANK

TABLE H

Nominal Pipe Size		Outside Diameter of Pipe	Flange Outside Diameter	Thickness of Flange: Copper Alloy	Thickness of Flange: Plate or Forged	Length Through Hub: Length of Boss	Length Through Hub: Length of Welding Neck	Diameter at Large End of Neck	Diameter at Small End of Neck	Drilling Data: Bolt Circle Diameter	Drilling Data: Diameter of Bolt Holes	Drilling Data: Number of Bolts
mm	inch	A	B	C	C	D	E	F	G	H	J	K
15	1/2"	21.3	115	10	13	10	29	30	22	83	18	4
20	3/4"	26.7	115	10	13	11	29	35	27	83	18	4
25	1"	33.4	120	11	14	11	29	43	34	87	18	4
32	1 1/4"	42.2	135	11	17	11	35	52	43	98	18	4
40	1 1/2"	48.3	140	13	17	13	35	59	49	105	18	4
50	2"	60.3	165	13	19	13	35	70	61	127	18	4
65	2 1/2"	73	185	14	19	16	38	86	76	146	18	8
80	3"	88.9	205	16	22	16	44	102	89	165	18	8
100	4"	114.3	230	19	25	19	51	130	115	191	18	8
125	5"	141.3	280	22	29	19	57	159	142	235	22	8
150	6"	168.3	305	25	29	19	57	184	169	260	22	12
200	8"	219.1	370	32	32	22	67	241	220	324	22	12
250	10"	273.8	430	35	35	27	73	298	274	381	26	12
300	12"	323.8	490	38	41	29	79	352	324	438	26	16
350	14"	355.6	550	41	48	-	86	387	356	495	30	16
400	16"	406.4	610	44	54	-	-	-	-	552	30	20
450	18"	457	675	48	60	-	-	-	-	610	33	20
500	20"	508	735	51	67	-	-	-	-	673	33	24
600	24"	610	850	57	76	-	-	-	-	781	36	24

Note:
- Dimensions are in (mm)
- Larger sizes available on request
- Thickness dimension include raised face
- Available with or without raised face
- Pipe diameter to ANSI standard
- Bore to suit customers pipe

10.05 Flange Specification (ASME B16.5)

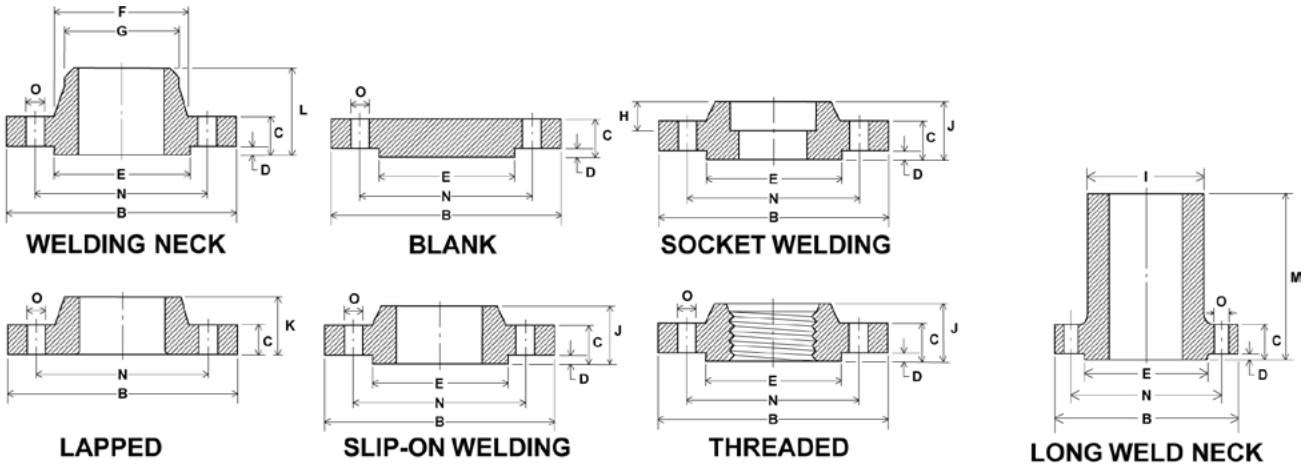

CLASS 150

Nominal Pipe Size		Outside Diameter of Pipe	Flange Outside Diameter	Thickness of Flange Min	Rasied Face Thickness	Rasied Face Diameter	Hub Diameter	Hub Dia. Start of Chamfer W. Neck	Socket Weld Depth	Hub Dia. Long Weld Neck	Length Through Hub: Thread Slip on Socket Welding	Length Through Hub: Lapped	Length Through Hub: Welding Neck	Length Through Hub: Long Welding Neck	Drilling Data: Bolt Circle Diameter	Drilling Data: Diameter of Bolt Holes	Drilling Data: Number of Bolts
mm	inch	A	B	C	D	E	F	G	H	I	J	K	L	M	N	O	P
15	1/2"	21.3	90	11.5	1.6	34.9	30	21.5	9.5	30.2	16	16	48	228.6	60.5	16	4
20	3/4"	26.7	98	13.0	1.6	42.9	38	26.5	11.1	38.1	16	16	52	228.6	70.0	16	4
25	1"	33.4	108	14.5	1.6	50.8	49	33.5	12.7	50.8	17	17	56	228.6	79.5	16	4
32	1 1/4"	42.2	117	16.0	1.6	63.5	59	42.0	14.2	60.3	21	21	57	228.6	89.0	16	4
40	1 1/2"	48.3	127	17.5	1.6	73.0	65	48.5	15.7	66.7	22	22	62	228.6	98.5	16	4
50	2"	60.3	152	19.5	1.6	92.1	78	60.5	17.5	82.5	25	25	64	228.6	120.5	20	4
65	2 1/2"	73	178	22.5	1.6	104.8	90	73.0	19.1	95.2	29	29	70	228.6	139.5	20	4
80	3"	88.9	191	24.0	1.6	127.0	108	89.0	20.6	107.9	30	30	70	304.8	152.5	20	4
100	4"	114.3	229	24.0	1.6	157.0	135	114.5	-	139.7	32	33	76	304.8	190.5	20	8
125	5"	141.3	254	24.0	1.6	185.7	164	141.5	-	165.1	36	36	89	304.8	216.0	23	8
150	6"	168.3	279	25.5	1.6	215.9	192	168.5	-	196.8	40	40	89	304.8	241.5	23	8
200	8"	219.1	343	29.0	1.6	269.9	246	219.0	-	247.6	44	44	102	304.8	298.5	23	8
250	10"	273.8	406	30.5	1.6	323.8	305	273.0	-	304.8	49	49	102	304.8	362.0	26	12
300	12"	323.8	483	32.0	1.6	381.0	365	324.0	-	365.1	56	56	114	304.8	432.0	26	12
350	14"	355.6	535	35.0	1.6	412.8	400	355.5	-	406.4	57	79	127	304.8	476.5	29	12
400	16"	406.4	600	37.0	1.6	469.9	457	406.5	-	457.2	64	87	127	304.8	540.0	29	16
450	18"	457	635	40.0	1.6	533.4	505	457.0	-	508.0	68	97	140	304.8	578.0	32	16
500	20"	508	700	43.0	1.6	584.2	559	508.0	-	558.8	73	103	145	304.8	635.0	32	20
600	24"	610	815	48.0	1.6	692.2	664	609.5	-	666.7	83	111	152	304.8	749.5	35	20

Note:
- Dimensions are in (mm)
- Larger sizes available on request
- Slip on bore is 0.76mm larger than pipe up to 250mm OD then 1.5mm
- Bore of long weld neck is to be nominal pipe size

10.06 Flange Specification (ASME B16.5)

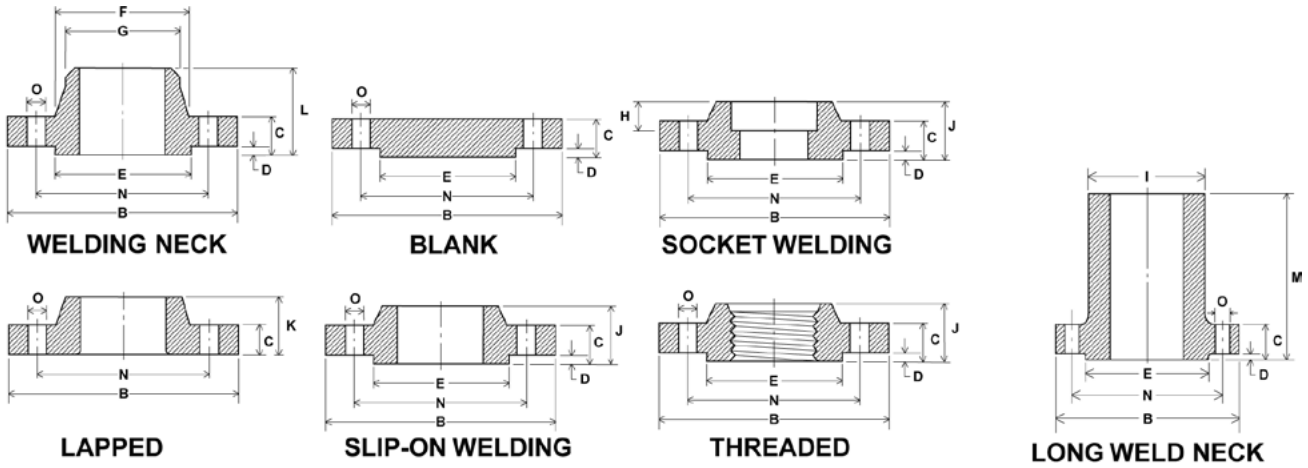

CLASS 300

Nominal Pipe Size		Outside Diameter of Pipe	Flange Outside Diameter	Thickness of Flange Min	Rasied Face Thickness	Rasied Face Diameter	Hub Diameter	Hub Dia. Start of Chamfer W. Neck	Socket Weld Depth	Hub Dia. Long Weld Neck	Length Through Hub: Thread Slip on Socket Welding	Length Through Hub: Lapped	Length Through Hub: Welding Neck	Length Through Hub: Long Welding Neck	Drilling Data: Bolt Circle Diameter	Drilling Data: Diameter of Bolt Holes	Drilling Data: Number of Bolts
mm	inch	A	B	C	D	E	F	G	H	I	J	K	L	M	N	O	P
15	1/2"	21.3	95	14.5	1.6	34.9	38	21.5	9.5	38.1	22	22	52	228.6	66.5	16	4
20	3/4"	26.7	117	16.5	1.6	42.9	48	26.5	11.1	47.6	25	25	57	228.6	82.5	20	4
25	1"	33.4	124	17.5	1.6	50.8	54	33.5	12.7	54.0	27	27	62	228.6	89.0	20	4
32	1 1/4"	42.2	133	19.5	1.6	63.5	64	42.0	14.2	63.5	27	27	65	228.6	98.5	20	4
40	1 1/2"	48.3	156	21.0	1.6	73.0	70	48.5	15.7	69.8	30	30	68	228.6	114.5	23	4
50	2"	60.3	165	22.5	1.6	92.1	84	60.5	17.6	84.1	33	33	70	228.6	127.0	20	8
65	2 1/2"	73	191	25.5	1.6	104.8	100	73.0	19.1	100.0	38	38	76	228.6	149.0	23	8
80	3"	88.9	210	29.0	1.6	127.0	118	89.0	20.6	117.5	43	43	79	228.6	168.5	23	8
100	4"	114.3	254	32.0	1.6	157.2	146	114.5	-	146.0	48	48	86	304.8	200.0	23	8
125	5"	141.3	279	35.0	1.6	185.7	178	141.5	-	177.8	51	51	98	304.8	235.0	23	8
150	6"	168.3	318	37.0	1.6	215.9	206	168.5	-	206.4	52	52	98	304.8	270.0	23	12
200	8"	219.1	381	41.5	1.6	269.9	260	219.0	-	260.3	62	56	111	304.8	330.0	26	12
250	10"	273.8	445	48.0	1.6	323.8	321	273.0	-	32.7	67	95	117	304.8	387.5	29	16
300	12"	323.8	520	51.0	1.6	381.0	375	324.0	-	374.6	73	102	130	304.8	451.0	32	16
350	14"	355.6	585	54.0	1.6	412.9	426	355.5	-	425.4	76	111	143	304.8	514.5	32	20
400	16"	406.4	650	57.5	1.6	469.9	483	406.5	-	482.6	83	121	146	304.8	571.5	35	20
450	18"	457	710	60.5	1.6	533.4	533	457.0	-	533.4	89	130	159	304.8	628.5	35	24
500	20"	508	775	63.5	1.6	584.2	587	508.0	-	587.3	95	140	162	304.8	686.0	35	24
600	24"	610	915	70.0	1.6	692.2	702	609.5	-	701.6	106	152	168	304.8	813.0	42	24

Note:
- Dimensions are in (mm)
- Larger sizes available on request
- Slip on bore is 0.76mm larger than pipe up to 250mm OD then 1.5mm
- Bore of long weld neck is to be nominal pipe size

10.07 Flange Specification (ASME B16.5)

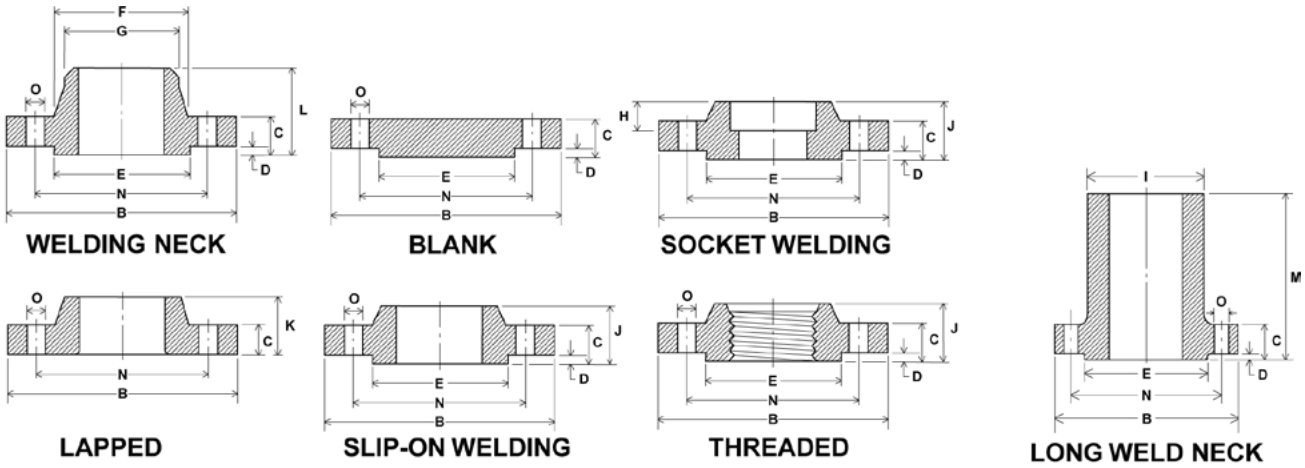

CLASS 600

Nominal Pipe Size		Outside Diameter of Pipe	Flange Outside Diameter	Thickness of Flange Min	Rasied Face Thickness	Rasied Face Diameter	Hub Diameter	Hub Dia. Start of Chamfer W. Neck	Socket Weld Depth	Hub Dia. Long Weld Neck	Length Through Hub: Thread Slip on Socket Welding	Length Through Hub: Lapped	Length Through Hub: Welding Neck	Length Through Hub: Long Welding Neck	Drilling Data: Bolt Circle Diameter	Drilling Data: Diameter of Bolt Holes	Drilling Data: Number of Bolts
mm	inch	A	B	C	D	E	F	G	H	I	J	K	L	M	N	O	P
15	1/2"	21.3	95	14.5	6.4	34.9	38	21.5	9.5	38.1	22	22	52	-	66.5	16	4
20	3/4"	26.7	117	16.0	6.4	42.9	48	26.5	11.1	47.6	25	25	57	-	82.5	20	4
25	1"	33.4	124	17.5	6.4	50.8	54	33.5	12.7	54.0	27	27	62	228.6	89.0	20	4
32	1 1/4"	42.2	133	21.0	6.4	63.5	64	42.0	14.2	63.5	29	29	67	228.6	98.5	20	4
40	1 1/2"	48.3	156	22.5	6.4	73.0	70	48.5	15.7	69.8	32	32	70	228.6	114.5	23	4
50	2"	60.3	165	25.5	6.4	92.1	84	60.5	17.5	84.1	37	37	73	228.6	127.0	20	8
65	2 1/2"	73	191	19.0	6.4	104.8	100	73.0	19.1	100.0	41	41	79	228.6	149.0	23	8
80	3"	88.9	210	32.0	6.4	127.0	117	89.0	20.6	117.5	46	46	83	228.6	168.0	23	8
100	4"	114.3	273	38.5	6.4	157.2	152	114.5	-	152.4	54	54	102	304.8	216.0	26	8
125	5"	141.3	330	44.5	6.4	185.7	189	141.5	-	190.5	60	60	114	304.8	267.0	29	8
150	6"	168.3	356	48.0	6.4	215.9	222	168.5	-	222.2	67	67	117	304.8	292.0	29	12
200	8"	219.1	419	55.5	6.4	269.9	273	219.0	-	273.0	76	76	133	304.8	349.0	32	12
250	10"	273.8	510	63.5	6.4	323.8	343	273.0	-	342.9	86	111	152	304.8	432.0	35	16
300	12"	323.8	560	67.0	6.4	381.0	400	324.0	-	400.0	92	117	156	304.8	489.0	35	20
350	14"	355.6	605	70.0	6.4	412.8	432	355.5	-	431.8	94	127	165	304.8	527.0	39	20
400	16"	406.4	685	76.5	6.4	469.9	495	406.5	-	495.3	106	140	178	304.8	603.0	42	20
450	18"	457	745	83.0	6.4	533.4	546	457.0	-	546.1	117	152	184	304.8	654.0	45	20
500	20"	508	815	89.0	6.4	584.2	610	508.0	-	609.6	127	165	190	304.8	724.0	45	24
600	24"	610	940	102.0	6.4	692.2	718	609.5	-	717.5	140	184	203	304.8	838.0	51	24

Note:
- Dimensions are in (mm)
- Larger sizes available on request
- Slip on bore is 0.76mm larger than pipe up to 250mm OD then 1.5mm
- Bore of long weld neck is to be nominal pipe size

QLD Ph: +617 5593 4292 | salesqld@hoseflex.com **WA** Ph: +618 9468 2840 | saleswa@hoseflex.com **VIC** Ph: +613 8566 7250 | salesvic@hoseflex.com

10.08 Flange Specification (EN 1092-1)

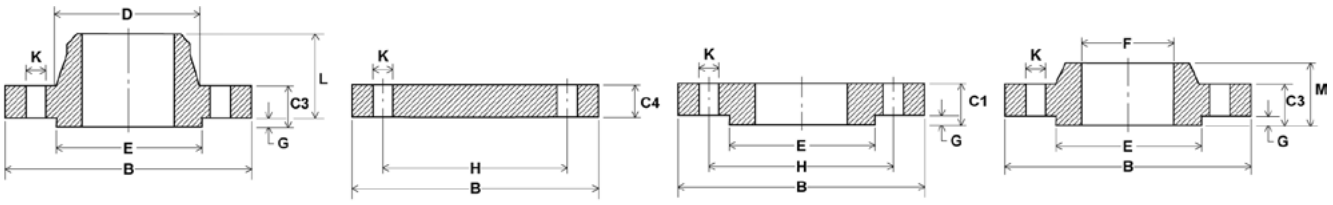

WELDING NECK BLANK PLATE SLIP-ON WELDING BOSSED

PN 6

Nominal Pipe Size		Outside Diameter of Pipe	Flange Outside Diameter	Thickness of Flange			Hub Diameter Weld Neck	Raised Face Diameter	Slip On Bore	Raised Face Thinkness	Drilling Data			Length Through Hub	
				Plate	Bossed & Weld Neck	Blind					Bolt Circle Diameter	Diameter of Bolt Holes	Number of Bolts	Overall Thickness Weld Neck	Overall Thickness Bossed
mm	inch	A	B	C1	C2	C3	D	E	F	G	H	J	K	L	M
15	1/2″	21.3	80	12	12	12	30	40	22.3	2	55	11	4	30	12
20	3/4″	26.7	90	14	14	14	38	50	27.6	2	65	11	4	32	24
25	1″	33.4	100	14	14	14	42	60	34.5	2	75	11	4	35	24
32	1 1/4″	42.2	120	16	14	14	55	70	43.1	2	90	14	4	35	26
40	1 1/2″	48.3	130	16	14	14	62	80	49.5	3	100	14	4	38	26
50	2″	60.3	140	16	14	14	74	90	61.9	3	110	14	4	38	28
65	2 1/2″	73	160	16	14	14	88	110	74.6	3	130	14	4	38	32
80	3″	88.9	190	18	16	16	102	128	90.6	3	150	18	4	42	34
100	4″	114.3	210	18	16	16	130	148	116.0	3	170	18	4	45	40
125	5″	141.3	24	20	18	18	155	178	143.7	3	200	18	8	48	44
150	6″	168.3	265	20	18	18	187	202	170.6	3	225	18	8	48	44
200	8″	219.1	320	22	20	20	236	258	221.1	3	280	18	8	55	44
250	10″	273.8	375	24	22	22	290	312	276.3	3	335	18	12	60	44
300	12″	323.8	440	24	22	22	342	365	327.1	4	395	22	12	62	44
350	14″	355.6	490	26	22	22	385	415	358.6	4	445	22	12	62	-
400	16″	406.4	540	28	22	22	438	465	409.4	4	495	22	16	65	-
450	18″	457	595	30	22	22	492	520	460.4	4	550	22	16	65	-
500	20″	508	645	30	24	24	538	570	460.0	4	600	22	20	68	-
600	24″	610	755	32	30	30	640	670	511.0	5	705	26	20	70	-

Note:
- Dimensions are in (mm)
- Larger sizes available on request
- Availiable with or without rasied face
- Weld neck bore is equal to pipe

10.09 Flange Specification (EN 1092-1)

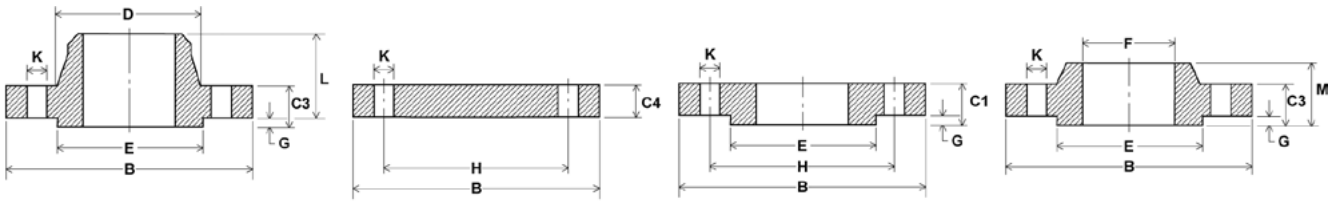

WELDING NECK BLANK PLATE SLIP-ON WELDING BOSSED

PN 10

Nominal Pipe Size		Outside Diameter of Pipe	Flange Outside Diameter	Thickness of Flange			Hub Diameter Weld Neck	Raised Face Diameter	Slip On Bore	Raised Face Thinkness	Drilling Data			Length Through Hub	
				Plate	Bossed & Weld Neck	Blind					Bolt Circle Diameter	Diameter of Bolt Holes	Number of Bolts	Overall Thickness Weld Neck	Overall Thickness Bossed
mm	inch	A	B	C1	C2	C3	D	E	F	G	H	J	K	L	M
15	1/2"	21.3	95	14	16	16	32	45	22.3	2	65	14	4	22	22
20	3/4"	26.7	105	16	18	18	39	58	27.6	2	75	14	4	26	26
25	1"	33.4	115	16	18	18	46	68	34.5	2	85	14	4	28	28
32	1 1/4"	42.2	140	18	18	18	56	78	43.1	2	100	18	4	30	30
40	1 1/2"	48.3	150	18	18	18	64	88	49.5	3	110	18	4	32	32
50	2"	60.3	165	19	18	18	74	102	61.9	3	125	18	4	28	28
65	2 1/2"	73	185	20	18	18	92	122	74.6	3	145	18	4	32	32
80	3"	88.9	200	20	20	20	110	138	90.6	3	160	18	8	34	34
100	4"	114.3	220	22	20	20	130	158	116.0	3	180	18	8	40	40
125	5"	141.3	250	22	22	22	158	188	143.7	3	210	18	8	44	44
150	6"	168.3	285	24	22	22	184	212	170.6	3	240	22	8	44	44
200	8"	219.1	340	24	24	24	234	268	221.1	3	295	22	8	44	44
250	10"	273.8	395	26	26	26	288	320	276.3	3	350	22	12	46	46
300	12"	323.8	445	26	26	26	342	370	327.1	4	400	22	12	46	46
350	14"	355.6	505	30	26	26	390	430	358.6	4	460	22	16	53	53
400	16"	406.4	565	32	26	26	440	482	409.4	4	515	26	16	57	57
450	18"	457	615	36	28	28	488	532	460.4	4	565	26	20	63	63
500	20"	508	670	38	28	28	540	585	460.0	4	620	26	20	67	67
600	24"	610	780	42	30	34	640	685	511.0	5	725	30	20	75	75

Note:
- Dimensions are in (mm)
- Larger sizes available on request
- Availiable with or without rasied face
- Weld neck bore is equal to pipe

QLD Ph: +617 5593 4292 | salesqld@hoseflex.com **WA** Ph: +618 9468 2840 | saleswa@hoseflex.com **VIC** Ph: +613 8566 7250 | salesvic@hoseflex.com

10.10 Flange Specification (EN 1092-1)

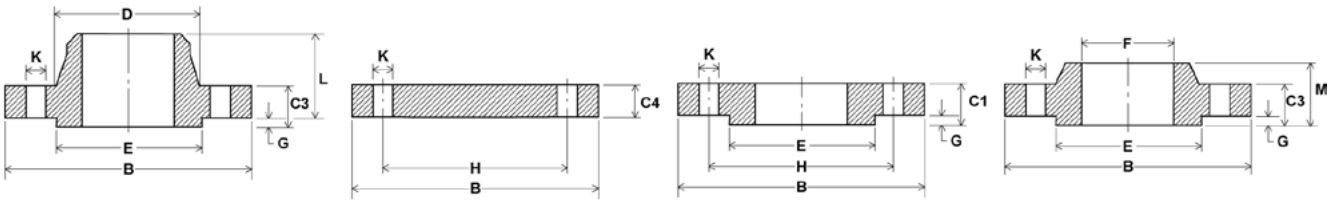

WELDING NECK BLANK PLATE SLIP-ON WELDING BOSSED

PN 16

				55Thickness of Flange							Drilling Data			Length Through Hub	
Nominal Pipe Size		Outside Diameter of Pipe	Flange Outside Diameter	Plate	Bossed & Weld Neck	Blind	Hub Diameter Weld Neck	Raised Face Diameter	Slip On Bore	Raised Face Thinkness	Bolt Circle Diameter	Diameter of Bolt Holes	Number of Bolts	Overall Thickness Weld Neck	Overall Thickness Bossed
mm	inch	A	B	C1	C2	C3	D	E	F	G	H	J	K	L	M
15	1/2″	21.3	95	14	16	16	32	45	22.3	2	65	14	4	38	22
20	3/4″	26.7	105	16	18	18	39	58	27.6	2	75	14	4	40	26
25	1″	33.4	115	16	18	18	46	68	34.5	2	85	14	4	40	28
32	1 1/4″	42.2	140	18	18	18	56	78	43.1	2	100	18	4	42	30
40	1 1/2″	48.3	150	18	18	18	64	88	49.5	3	110	18	4	45	32
50	2″	60.3	165	20	18	18	74	102	61.9	3	125	18	4	45	28
65	2 1/2″	73	185	20	18	18	92	122	74.6	3	145	18	4 / 8	45	32
80	3″	88.9	200	20	20	20	110	138	90.6	3	160	18	8	50	34
100	4″	114.3	220	22	20	20	130	158	116.0	3	180	18	8	52	40
125	5″	141.3	250	22	22	22	158	188	143.7	3	210	18	8	55	44
150	6″	168.3	285	24	22	22	184	212	170.6	3	240	22	8	55	44
200	8″	219.1	340	26	24	24	234	268	221.1	3	295	22	12	62	44
250	10″	273.8	405	29	26	26	288	320	276.3	3	355	26	12	70	46
300	12″	323.8	460	32	28	28	342	378	327.1	4	410	26	12	78	46
350	14″	355.6	520	35	30	30	390	438	358.6	4	470	26	16	82	57
400	16″	406.4	580	38	32	32	444	490	409.4	4	525	30	16	85	63
450	18″	457	640	42	34	40	490	550	460.4	4	585	30	20	87	68
500	20″	508	715	46	36	44	546	610	460.0	4	650	33	20	90	73
600	24″	610	840	55	40	54	650	725	511.0	5	770	36	20	95	83

Note:
- Dimensions are in (mm)
- Larger sizes available on request
- Availiable with or without rasied face
- Weld neck bore is equal to pipe

10.11 Flange Specification (EN 1092-1)

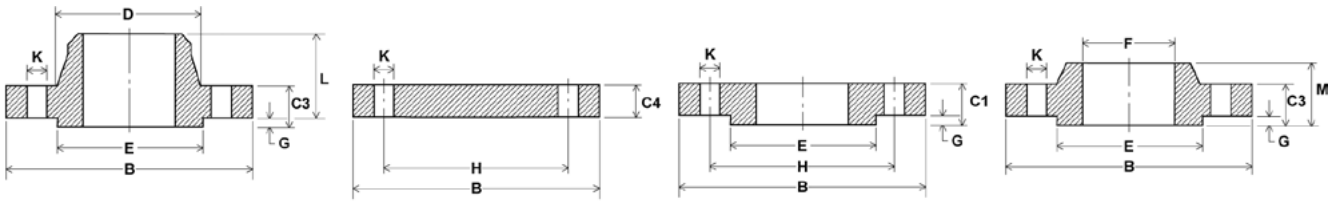

WELDING NECK BLANK PLATE SLIP-ON WELDING BOSSED

PN 25

Nominal Pipe Size		Outside Diameter of Pipe	Flange Outside Diameter	Thickness of Flange			Hub Diameter Weld Neck	Raised Face Diameter	Slip On Bore	Raised Face Thinkness	Drilling Data			Length Through Hub	
				Plate	Bossed & Weld Neck	Blind					Bolt Circle Diameter	Diameter of Bolt Holes	Number of Bolts	Overall Thickness Weld Neck	Overall Thickness Bossed
mm	inch	A	B	C1	C2	C3	D	E	F	G	H	J	K	L	M
15	1/2"	21.3	95	14	16	16	32	45	22.3	2	65	14	4	38	22
20	3/4"	26.7	105	16	18	18	40	58	27.6	2	75	14	4	40	26
25	1"	33.4	115	16	18	18	46	68	34.5	2	85	14	4	40	28
32	1 1/4"	42.2	140	18	18	18	56	78	43.1	2	100	18	4	42	30
40	1 1/2"	48.3	150	18	18	18	64	88	49.5	3	110	18	4	45	32
50	2"	60.3	165	20	20	20	74	102	61.9	3	125	18	4	48	34
65	2 1/2"	73	185	22	22	22	92	122	74.6	3	145	18	8	52	38
80	3"	88.9	200	24	24	24	110	138	90.6	3	160	18	8	58	40
100	4"	114.3	235	26	24	24	134	162	116.0	3	190	22	8	65	44
125	5"	141.3	270	28	26	26	162	188	143.7	3	220	26	8	68	48
150	6"	168.3	300	30	28	28	190	218	170.6	3	250	26	8	75	52
200	8"	219.1	360	32	30	30	244	278	221.1	3	310	26	12	80	52
250	10"	273.8	425	35	32	32	296	335	276.3	3	370	30	12	88	60
300	12"	323.8	485	38	34	34	350	395	327.1	4	430	30	16	92	67
350	14"	355.6	555	42	38	38	398	450	358.6	4	490	33	16	100	72
400	16"	406.4	620	48	40	40	452	505	409.4	4	550	36	16	110	78
450	18"	457	670	54	46	50	500	555	460.4	4	600	36	20	110	84
500	20"	508	730	58	48	51	558	615	460.0	4	660	36	20	125	90
600	24"	610	845	68	48	66	660	720	511.0	5	770	39	20	125	100

Note:
- Dimensions are in (mm)
- Larger sizes available on request
- Availiable with or without rasied face
- Weld neck bore is equal to pipe

10.12 Flange Specification (EN 1092-1)

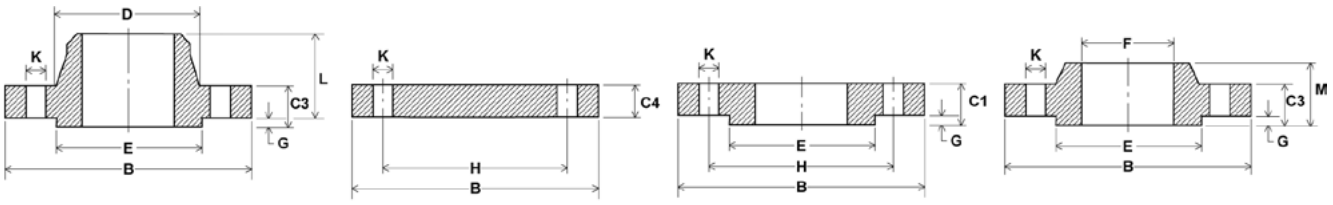

WELDING NECK BLANK PLATE SLIP-ON WELDING BOSSED

PN 40

				Thickness of Flange							Drilling Data			Length Through Hub	
Nominal Pipe Size		Outside Diameter of Pipe	Flange Outside Diameter	Plate	Bossed & Weld Neck	Blind	Hub Diameter Weld Neck	Raised Face Diameter	Slip On Bore	Raised Face Thinkness	Bolt Circle Diameter	Diameter of Bolt Holes	Number of Bolts	Overall Thickness Weld Neck	Overall Thickness Bossed
mm	inch	A	B	C1	C2	C3	D	E	F	G	H	J	K	L	M
15	1/2"	21.3	95	14	16	16	32	45	22.3	2	65	14	4	38	22
20	3/4"	26.7	105	16	18	18	40	58	27.6	2	75	14	4	40	26
25	1"	33.4	115	16	18	18	46	68	34.5	2	85	14	4	40	28
32	1 1/4"	42.2	140	18	18	18	56	78	43.1	2	100	18	4	42	30
40	1 1/2"	48.3	150	18	18	18	64	88	49.5	3	110	18	4	45	32
50	2"	60.3	165	20	20	20	74	102	61.9	3	125	18	4	48	34
65	2 1/2"	73	185	22	22	22	92	122	74.6	3	145	18	8	52	38
80	3"	88.9	200	24	24	24	110	138	90.6	3	160	18	8	58	40
100	4"	114.3	235	26	24	24	134	162	116.0	3	190	22	8	65	44
125	5"	141.3	270	28	26	26	162	188	143.7	3	220	26	8	68	48
150	6"	168.3	300	30	28	28	190	218	170.6	3	250	26	8	75	52
200	8"	219.1	375	36	34	36	244	285	221.1	3	320	30	12	88	52
250	10"	273.8	450	42	38	38	306	345	276.3	3	385	33	12	105	60
300	12"	323.8	515	52	42	42	362	410	327.1	4	450	33	16	115	67
350	14"	355.6	580	58	46	46	408	465	358.6	4	510	36	16	125	72
400	16"	406.4	660	65	50	50	462	535	409.4	4	585	39	16	135	78
450	18"	457	685	66	57	57	500	560	460.4	4	610	39	20	135	84
500	20"	508	755	72	57	57	562	615	460.0	4	670	42	20	140	90
600	24"	610	890	84	72	72	666	735	511.0	5	795	48	20	150	100

Note:
- Dimensions are in (mm)
- Larger sizes available on request
- Availiable with or without rasied face
- Weld neck bore is equal to pipe

TECHNICAL DATA

10.13 | Chemical Compatibility Table

Media	Chemical Formula	Metals														Elastomers				Polymers								
		Aluminum	Brass	Carbon Steel	Ductile Iron / Cast Iron	316/316Ti/321 S.St	17-4PH	Alloy20	Monel	Hastelloy C®	Inconel 625	Titanium	Bronze	304 Stainless Steel	Duplex	Buna N (Nitrile)	EPDM/EPR	Viton	Flexible Graphite	Delrin®	Peek®	PVDF	Teflon® and Reinforced Teflon	PCTFE	UHMWPE®	Vespel®	PFA	KEL-F®
Acetaldehyde	C_2H_4O	B	B	C	C	A	A	A	A	A		A	C	A		D	A	D	A	A	B	D	A	A	A		A	A
Acetamine	HCl	B	B	B	B	B				A				B		A							A					
Acetate Solvents	-	A	A	D	B	A	A		A	A		A	B	B		D	A	D	A	D		A	A					B
Acetic Acid (aerated)	$C_2H_4O_2$	C	D	D	C	A			A	A		A	C			C		C	A	D	A		A					
Acetic Acid (air free)	$C_2H_4O_2$	C	D	D	C	A	A	A	A	A		A	C			C		D	A	D	A		A					
Acetic Acid (crude)	$C_2H_4O_2$	C	D	D	D	A	A	A	A	A		A	C			D		D	A	D	A		A					
Acetic Acid Glacial	$C_2H_4O_2$	C	D	D	D	A	B	A	A	A		A	C	C		D	B	C	A	D	A	B	A	A	A			A
Acetic Acid (pure)	$C_2H_4O_2$	C	D	D	D	A	A	A	A	A	A	A	C	D		D		D	A	D	A	C	A					A
Acetic Acid 10%	$C_2H_4O_2$	C	D	D	D	A	A	A	A	A		A	C	C		D	B	D	A	B	A	A	A	A	A	A	A	A
Acetic Acid 80%	$C_2H_4O_2$	C	D	D	D	A	A	A	A	A		A	C	D		D	C	D	A	D	A	C	A			B	A	A
Acetic Acid Vapors	-	B	D			C	C	B	C	A						D			A				A					
Acetic Anhydride	$C_4H_6O_3$	C	D	D	D	B	B	B	B	A		A	C	B		D	C	D	A	D	D	D	A	A	A		A	A
Acetone	C_3H_6O	A	A	A	A	A	A	A	A	A	A	A	A	B		D	A	D	A	B	A	D	A	A	A	A	A	A
Other Ketones	RC(=O)R'	A	A	A	A	A	A	A	A	A						D	B	D		B		D	A				A	
Acetyl Chloride	CH_3COCl	C	B	A	C	A	A	A	A	A			D	C		D	D	D		D	B	B	A					A
Acetylene	C_2H_2	A	C	A	A	A	A	A	A	A		B	C	A		B	A	A	A	A	B	A	A				A	
Acid Fumes	-	B	D	D	D	B		B								C				D		A	A	A			A	
Acrylonitrile	C_3H_3N	B	A	A	C	A	A	A	A	B		B	A	A		D	D	D	B	D	A	B	A					
Air	-	A	A	A	A	A	A	A	A	A	A	A	A	A	A	A	A	A	A	A	A	A	A					
Alcohol, Amyl	$C_5H_{11}OH$	B	B	B	B	A	B	B	B	A		A	B	A		C	A	B	A	A	A	A	A	A			A	A
Alcohol, Butyl	C_4H_9OH	A	B	B	C	A	B	A	A	A		B	B	A		B	B	A	A	A	A	A	A	A			A	
Alcohol, Diacetone	$CH_3C(O)CH_2C(OH)(CH_3)_2$	A	B	B	B	A	B	A	B	A		A	B	A		D	A	D	A	A	A	B	A	A			A	B
Alcohol, Ethyl	C_2H_6O	B	B	B	B	A	B	A	B	A		A	B	A		A	A	A	A	B	A	A	A	A			A	A
Alcohol, Fatty	-	B	B	B	B	A	B	A		A			B			B			A	A		A	A	A			A	
Alcohol, Isopropyl	C_3H_8O	B	B	B	B	B	B	A	B	A		B	B	B		C	A	A	A	A	A	A	A	A			A	
Alcohol, Methyl	CH_4O	C	B	B	B	A	B	A	A	A		A	B	A		B	A	C	A	B	A	A	A	A			A	B
Alcohol, Propyl	C_3H_8O	B	B	A	B	A	B	A	A	A		A	B	A		B	A	A	A	A		A	A	A			A	
Alumunia	-	A	A							A						A	A			A			A					
Aluminum Acetate	$Al(C_2H_3O_2)_3$	C	C		C	B	B	A	B	B	A		C			D	A	D		D			A					
Aluminum Chloride (dry)	$AlCl_3$	C	D	D	D	C	B	D	B	A		C	D	D		B	A	A	A	C	A	A	A	A	A	A	A	A
Aluminum Chloride Solution	-	B	D	D	D	D	C	B	B	A		B	D	C		B		A	A	D	A	A	A	A	A			A

Ratings: A - Excellent B - Good C - Poor D - Do not use Blank - No Information

QLD Ph: +617 5593 4292 | salesqld@hoseflex.com **WA** Ph: +618 9468 2840 | saleswa@hoseflex.com **VIC** Ph: +613 8566 7250 | salesvic@hoseflex.com

Media	Chemical Formula	Metals														Elastomers				Polymers								
		Aluminum	Brass	Carbon Steel	Ductile Iron / Cast Iron	316/316Ti/321 S.St	17-4PH	Alloy20	Monel	Hastelloy C®	Inconel 625	Titanium	Bronze	304 Stainless Steel	Duplex	Buna N (Nitrile)	EPDM/EPR	Viton	Flexible Graphite	Delrin®	Peek®	PVDF	Teflon® and Reinforced Teflon	PCTFE	UHMWPE®	Vespel®	PFA	KEL-F®
Aluminum Fluoride	AlF_3	C	D	D	D	C	C	B	A	B		C	C	D		A	A	A	A	C		A	A					
Aluminum Hydroxide	AlH_6O_3	B	D	D	D	A	A	A	B	A		B	D	A		A	A	A	A	B		A	A					B
Aluminum Nitrate	AlN_3O_9	D	D	D	D	B	A	A	C	B		A	D	C		B	B	D	A	C		B	A					B
Aluminum Oxalate	$C_6AlO_{12\text{-}3}$	B			B	A		A	B	A			D										A					
Aluminum Potassium Sulfate	$AlKO_8S_2$	B	B	C	D	B	C	B	B	C		A	C	C		B	A	B	A	C			A	A				A
Aluminum Sulfate (Alum)	$Al_2O_{12}S_3$	C	C	D	D	B	B	B	C	B		A	C	B		A	A	A	A	C	A	A	A	A		A	A	A
Amines	$R_3\text{-}xNHx$	C	B	B	C	A	A	A	B	A		B	C	A	A	D	C	D	A	D	A		A					A
Ammonia Alum	$AlH_{28}NO_{20}S2$	C			C	A	B	A	B	A		B	C	B		B			A	C			A					
Ammonia, Anh. Liquid	NH_3	A	D	A	B	A	A	A	A	B		B	D	B		B	B	D	A	D	A	B	A	A			A	A
Ammonia Aqueous	H_5NO	B	C	C	C	A		A	B	A		B	D	A	A	D	B	C	A		A	A	A	A			A	
Ammonia Gas (hot)	H_3N	B	C	B	B	B	A	A	A	A		B	D			A		D		D	A		A					
Ammonia Liquor	-	A	C	A	B	B	A	A	A	B			D	C		D	A	D	A	D			A					
Ammonia Solutions	-	B	D	B	C	A	A	A	A	A		B	D			C	A	D	A	D	A		A					
Ammonium Acetate	$C_2H_3O_2NH_4$	A	D	D	D	B	A	A	B	A			D	B		C	A	D	A	D			A					
Ammonium Bicarbonate	NH_4HCO_3	B	B	C	C	B		B	B	B				B		B	A	A		B			A					
Ammonium Bromide 5%	NH_4Br	D				B		B	B											B			A					
Ammonium Carbonate	$(NH_4)_2CO_3$	B	D	B	B	B	B	B	B	B		A	D	B		C	A	B	A	D	A	A	A					
Ammonium Chloride	NH_4Cl	C	C	D	D	C	C	B	B	B		C	D	D		B	A	A	A	C	A	A	A				A	A
Ammonium Hydroxide 28%	NH_4OH	C	D	C	B	B	A	A	B	B		A	D	B		B	A	B	A	C	A	A	A			B		A
Ammonium Hydroxide Conc.	NH_4OH	C	D	C	B	B	A	A	C	B		A	D	A		C	A	B	A	D	A	B	A			D		
Ammonium Monosulfate	-	D				B	A	B	B	B				A						D			A					
Ammonium Nitrate	$(NH_4)(NO_3)$	B	D	D	B	A	A	A	A	A		A	D	A		A	A	B	A	C	A	A	A					A
Ammonium Oxalate 5%	$C_2H_8N_2O_4$	A		A	D	A	A	A	B	A			D	A		D	A			B			A					
Ammonium Persulfate	$H_8N_2O_8S_2$	D	D	C	D	A	A	A	D	B		B	C	A		D	B	B	A	D		B	A					
Ammonium Phosphate (mono)	$(NH_4)_3PO_4$	B	C	D	D	B	A	A	C	A		A	C	C		C	A	A		B	A		A					
Ammonium Phosphate Di-basic	$(NH_4)_2HPO_4$	B	C	D	C	B	B	B	C	A		A	D	B		A	A	A	A	B		A	A					A
Ammonium Phosphate Tri-basic	-	B	C	D	C	B	B	B	C	A		A	C	B		A	A	A		B			A					
Ammonium Sulfate	$(NH_4)_2SO_4$	C	D	C	C	C	B	A	B	B		A	D	C		B	A	C	A	C	A	A	A					A
Ammonium Sulfide	$(NH_4)_2S$	B	D	D	D	B	B	B	B	A			D	C		A	A	D		B			A					
Ammonium Sulfite	$(NH_4)_2SO_4$,	D	C	C	C	A	B	B	D	A			B	B		B	B	C	D	D			A					A
Amyl Acetate	$CH_3COO(CH_2)_4CH_3$	A	A	C	C	B	A	A	A	A		A	B	A		D	B	C	A	C	A	A	A	A	A		A	B

Ratings: A - Excellent B - Good C - Poor D - Do not use Blank - No Information

TECHNICAL DATA

10.15 | Chemical Compatibility Table

Media	Chemical Formula	Metals														Elastomers				Polymers								
		Aluminum	Brass	Carbon Steel	Ductile Iron / Cast Iron	316/316Ti/321 S.St	17-4PH	Alloy20	Monel	Hastelloy C®	Inconel 625	Titanium	Bronze	304 Stainless Steel	Duplex	Buna N (Nitrile)	EPDM/EPR	Viton	Flexible Graphite	Delrin®	Peek®	PVDF	Teflon® and Reinforced Teflon	PCTFE	UHMWPE®	Vespel®	PFA	KEL-F®
Amyl Chloride	$C_5H_{11}Cl$	B	B	A	B	B	B	A	A	A		C	A	B		D	D	D	A	A		A	A					A
Aniline	C_6H_7N	C	D	C	C	A	A	A	B	B		C	C	A		D	B	C	A	B	A	B	A	A	A	D	A	A
Aniline Dyes	-	C	C	C	C	A	A	A	A				C	A		C	B	B		B			A					
Apple Juice	-	B	C	D	D	B		A	A							A	B	A		A	A		A					
Aqua Regia (Strong Acid)	-	D	D	D	D	C	C	B		C		B	D	D		D	D	D	D	D	D	A	A	A	D		A	A
Aromatic Solvents	-	A	A	C	B	A		A	B							D	D	A		A	A	A	A	A			A	
Arsenic Acid	AsH_3O_4	D	C	D	D	B	B	A	A	B		B	C	A		A	B	A	A	D		A	A					
Asphalt Emulsion	-	C	B	B	B	A	A	A	B	A			B	A		D	D	A	A	B	A	A	A					A
Asphalt Liquid	-	C	B	B	B	A	A	A	B	A			A			C	D	A	A	B	A		A					A
Barium Carbonate	$CBaO_3$	C	B	B	B	B	A	A	A	A		A	B	B		B	A	A	A	A	A	A	A					A
Barium Chloride	$BaCl_2$	D	B	C	C	B	A	A	A	A		A	B	A		A	A	A	A	A	A	A	A					A
Barium Cyanide	$Ba(CN)_2$	D	C		C	B	A	B	C	A			C	A		B	A	A		B			A					
Barium Hydrate	BaH_2O_2	D	D			A		A	B											A			A					
Barium Hydroxide	$Ba(OH)_2$	D	D	C	C	A	A	A	A	B		B	D	B		A	A	A	A	D	A	A	A					A
Barium Nitrate	$Ba(NO_3)_2$	B	D	A	A	A	B	A		A		A	D	B		A	A	A	A	B			A					A
Barium Sulfate	$BaSO_4$	C	B	B	C	B	A	A	A	A		A	C	C		A	A	A	A	B	A	A	A					A
Barium Sulfide	BaS	D	C	C	C	B	A	A	A	A		B	D	C		A	A	A	A	A	A	A	A					
Beer	-	A	B	C	D	A	A	A	A	A	A	A	A	A		B	A	A	A	B	A	A	A	A	A		A	A
Beet Sugar Liquors	-	A	B	B	B	A	A	A	A	A		A	B	A		A	A	A	A	B	A	A	A					A
Benzaldehyde	$C7H_6O$	B	B	B	C	A	A	A	B	A		A	A	C		D	A	D	A	A	A	A	A	A	A		A	A
Benzene (Benzol)	C_6H_6	B	A	B	B	B	A	A	A	A	A	A	A	B		D	D	A	A	A	A	A	A	A	A	A	A	B
Benzoic Acid	$C_7H_6O_2$	B	C	D	D	B	A	A	B	A		A	C	B		C	D	A	A	B	A	A	A	A	A	A	A	A
Beryllium Sulfate	BeO_4S	B	B		B	B		A	B							B	B	B		A			A					
Bleaching Powder Wet	-		B	C	C	C		B	A					B		D	B	B		B			A					
Blood (meat juices)	-	B	B		D	A	A	A	A	A	A		B	A		A	B	B		B			A					
Borax (Sodium Borate)	$Na_2B_4O_7{\cdot}10H_2O$	C	B	C	A	A	A	A	A	A		B	B	A		A	A	A	A	B		A	A		A			A
Bordeaux Mixture	-					A		A		A						A							A					
Borax Liquors	-	C	A	C	C	B		A	B	A						A	A	A		B			A					
Boric Acid	BH_3O_3	C	C	D	D	C	B	A	A	A	A	A	B	B		B	A	A	A	A	A	A	A	A	A	A	A	A
Brake Fluid	-	B	B	A	B	A	A	A	A	A			B	A		D	B	D		B	A		A					
Brines (saturated)	-	C	B	C	C	B	B	B	B	A			A	B	A	A	A	A		A			A	A	A		A	

Ratings: A - Excellent B - Good C - Poor D - Do not use Blank - No Information

QLD Ph: +617 5593 4292 | salesqld@hoseflex.com **WA** Ph: +618 9468 2840 | saleswa@hoseflex.com **VIC** Ph: +613 8566 7250 | salesvic@hoseflex.com

Media	Chemical Formula	Metals														Elastomers				Polymers								
		Aluminum	Brass	Carbon Steel	Ductile Iron / Cast Iron	316/316Ti/321 S.St	17-4PH	Alloy20	Monel	Hastelloy C®	Inconel 625	Titanium	Bronze	304 Stainless Steel	Duplex	Buna N (Nitrile)	EPDM/EPR	Viton	Flexible Graphite	Delrin®	Peek®	PVDF	Teflon® and Reinforced Teflon	PCTFE	UHMWPE®	Vespel®	PFA	KEL-F®
Bromine (dry)	Br	D	C	D	D	D	C	B	B	A	A	B	D	D		D	D	A	D	D	D	A	A	A	D		A	A
Bunker Oils (Fuel)	-	A	B	A	B	A		A	A	A			A	A		B	C	A		A			A					
Butadiene	C_4H_6	A	B	B	B	A	A	A	A	B		A	C	A		C	C	A	A	A	A	A	A					A
Butane	C_4H_{10}	A	A	B	C	A	A	A	A	A		A	B	A	A	B	D	A	A	A	A	A	A		A			A
Butter	-	A			D	A		A					D	C		B	A	A		A			A					
Buttermilk	-	A	D	D	D	A		A	D	A			D	A		A	B	A	A	A	A		A					A
Butyl Acetate	$C_6H_{12}O_2$	B	B	B	B	B	A	A	A	A		B	B	C		D	C	D		B	A	A	A	A	A		A	
Butylene	C_4H_8	A	A	A	A	A	A	A	A	A			A	A		D	D	D	A	A	A	A	A		A			C
Butyric Acid	$C_4H_8O_2$	B	B	D	D	B	A	A	A	A		A	C	C		C	C	C	A	B	A	A	A		A			A
Calcium Bisulfite	$CaH_2O_6S_2$	C	D	D	D	B	B	A	D	B		A	C	B		A	D	A	A	D	A	A	A					A
Calcium Carbonate	$CaCO_3$	C	D	C	D	B	A	A	A	A		A	C	A		B	B	A	A	A	A	A	A		A			
Calcium Chlorate	$Ca(ClO_3)_2$	B	C	B	C	B		A	A	B		B	B	B		B	B	B	B	C		A	A					
Calcium Chloride	$CaCl_2$	D	C	C	C	B	B	A	A	A	A	A	B	C		A	A	A	A	D	A	A	A	A	A	A	A	A
Calcium Hydroxide	$Ca(OH)_2$	C	D	C	C	B	A	A	A	A	A	A	C	B		A	A	A	A	D	A	A	A			D		A
Calcium Nitrate	$Ca(NO_3)_2$	C	B	B	C	B	B	A	A	B		B	B	C		B	B	A	B	D	A	A	A		A	A		B
Calcium Phosphate	$Ca_3(PO_4)_2$	D	C		C	B		B								B	B	B		B			A					
Calcium Silicate	Ca_2SiO_4	D	C		C	B		B		A						B	B	B		A			A					
Calcium Sulfate	CaO_4S	C	B	B	C	C	A	A	A	B	A	A	B	B		A	B	A	A	D	A	A	A			A		A
Caliche Liquor	-			B		A		A								B				A			A					
Camphor	$C_{10}H_{16}O$	C	C	B	C	B	A	A	C				B			B	B	B		A	A		A		A			
Cane Sugar Liquors	$C_{12}H_{22}O_{11}$	B	B	A	B	A	A	A	A	A			A	A		B	A	B		A		A	A					
Carbonated Beverages	-	B	B	D	B	B	B	B	C	A						B	B	B	A	A			A					
Carbonated Water	-	A	D	B	C	A	B	A	B				B	A		A	A	A	A	A			A					
Carbon Bisulfide	CS_2	B	C	B	B	B	A	B	B	B			B	A		D	D	A		A			A					
Carbon Dioxide (dry)	CO_2	B	B	B	B	A	A	A	A	A		A	B	A	A	C	B	B	A	A	A	A	A			A		A
Carbonic Acid	CH_2O_3	A	D	B	D	B	A	A	A	B		B	C	A	B	B	B	A	A	B	A	A	A	A	A		A	A
Carbon Monoxide	CO	A	A	B	B	A	A	A	A	A			A	A		B	B	B	A	A	A	B	A			A		B
Carbon Tetrachloride (dry)	CCl_4	C	B	C	C	A	A	A	A	A		A	B	B		D	D	B	B	B	A	A	A	A	B	A	A	D
Carbon Tetrachloride (wet)	CCl_4	D	C	D	D	B	A	B	B	A		A	C	A		D	D	B	B	B		A	A	A	B	A	A	B
Casein	-	C	C		C	B		B	C	B						B	B	B		A			A					
Castor Oil	-	A	A	A	A	A	A	A	A	A			B	A		A	B	A	A	A	A		A		A			

Ratings: A - Excellent B - Good C - Poor D - Do not use Blank - No Information

TECHNICAL DATA

10.17 | Chemical Compatibility Table

Media	Chemical Formula	Metals														Elastomers				Polymers								
		Aluminum	Brass	Carbon Steel	Ductile Iron / Cast Iron	316/316Ti/321 S.St	17-4PH	Alloy20	Monel	Hastelloy C®	Inconel 625	Titanium	Bronze	304 Stainless Steel	Duplex	Buna N (Nitrile)	EPDM/EPR	Viton	Flexible Graphite	Delrin®	Peek®	PVDF	Teflon® and Reinforced Teflon	PCTFE	UHMWPE®	Vespel®	PFA	KEL-F®
Caustic Potash	HKO	C	C	B	B	A	A	A	A	A			C			B			A	D	A		A	A	A			
Caustic Soda	HNaO	D	D	B	B	A	A	A	A	A			B	A		C	B	C	A	D	A	A	A	A	A		A	
Cellulose Acetate	-	B	B		B	B			B	B						D	B	D		C			A				A	
China Wood Oil (Tung)	-	A	C	C	C	A	A	A	A	A				A		A	D	A		A			A					
Chlorinated Solvents	-	C	C	C	C	C		A	B	A			A			D	D	C		A	B		A					
Chlorinated Water		D	D	C	D	C	C	A	C	B		A	C	C		B	C	A	B	D	D	A	A	A				A
Chlorine Gas (dry)	Cl_2	C	D	C	B	B	B	B	A	A		C	D	B		C	D	B	A	D	D	A	A	A	B	A	A	D
Chlorobenzene (dry)	C_6H_5Cl	B	B	B	C	A	A	A	A	A		B	B	A		D	D	A	A	C	C	B	A	A		A	A	B
Chloroform (dry)	$CHCl_3$	C	B	C	C	A	A	A	A	B		A	B	A		D	D	B	A	B	A	C	A	A	B	A	A	C
Chlorophyll (dry)	-	B	B		B	B		A	B	A						B	B	B					A					
Chlorosulfonic Acid (dry)	HSO_3Cl	C	C	C	B	C	C	B	A	B		A	C	D		D	D	D	A	D	B	D	A	A	D		A	A
Chrome Alum	$CrKO_8S_2$	C	C	B	C	A		A	B							B	B	B		B			A					
Chromic Acid<50%	CrH_2O_4	D	D	D	D	C	B	B	C	C		A	D	B		D	C	C	C	D	D	A	A	A	A	D	A	A
Chromic Acid>50%	CrH_2O_4	D	D	D	D	C	C	B	D	C		B	D	C		D	C	C	C	D	D	A	A	A	A	D	A	B
Chromium Sulfate	$Cr_2O_{12}S_3$	B	C		D	B	B	C	B					B		B	B	B		C			A					
Cider	-	B			D	A	A	B	A	A			A	A		A	A	A		A			A					
Citric Acid	$C_6H_8O_7$	C	D	D	D	C	A	A	A	A		A	D	B		B	B	A	A	C	A	A	A	A	A	A	A	A
Citrus Juices	-	C	B	D	D	B	A	A	A	A						A		A		A			A					
Coca Cola Syrup	-					A		A		A				A		B		B		A	A		A					
Coconut Oil	-	B	B	C	C	A	A	A	B	A			B	A		A	A	A		A	A	A	A		A			
Coffee	-	A	A	C	C	A	A	A	B	A		A	A	A		A	A	A		A			A					
Coffee Extracts (hot)	-	A	A	C	C	A		A	A											A			A					
Coke Oven Gas	-	A	C	B	B	A	A	A	B				B			C	D	B		C			A					
Cooking Oil	-	B	B	B	B	A		A	A	A						A	D	A		A	A		A					
Copper Acetate	$C_4H_6CuO_4$	D	D	C	D	A		A	B	A			C			C	B	D		C	A	A	A	A				
Copper Carbonate	$CCuO_3$	D				A		A	A											A	A	A	A	A				
Copper Cyanide	CCuN	D	D	C	D	A		A	C	A		A	D	B		A	B	B	A	B	A	A	A	A				
Copper Nitrate	$Cu(NO_3)_2$	D	D	D	D	B		A	D	B		B	D	A		A	B	A	A	A	A	A	A	A				A
Copper Sulfate	CuO_4S	D	D	D	D	B	A	A	D	A		A	D	B		A	A	A	A	D	A	A	A	A		A		A
Corn Oil	-	B	B	B	C	B	A	A	B	A			B	A		A	C	A		A	A		A		A			
Cotton seed Oil	-	B	B	B	C	B	A	A	B	A		A	B	A		A	C	B		B	A	A	A					

Ratings: A - Excellent B - Good C - Poor D - Do not use Blank - No Information

QLD Ph: +617 5593 4292 | salesqld@hoseflex.com **WA** Ph: +618 9468 2840 | saleswa@hoseflex.com **VIC** Ph: +613 8566 7250 | salesvic@hoseflex.com

Media	Chemical Formula	Metals														Elastomers				Polymers								
		Aluminum	Brass	Carbon Steel	Ductile Iron / Cast Iron	316/316Ti/321 S.St	17-4PH	Alloy20	Monel	Hastelloy C®	Inconel 625	Titanium	Bronze	304 Stainless Steel	Duplex	Buna N (Nitrile)	EPDM/EPR	Viton	Flexible Graphite	Delrin®	Peek®	PVDF	Teflon® and Reinforced Teflon	PCTFE	UHMWPE®	Vespel®	PFA	KEL-F®
Cresol	C_7H_8O	A	C	A	C	B	A	B	B	B		B	A	A		D	D	D	A	D	D	B	A		A			B
Creosote Oil	-	B	B	B	B	A	A	A	B	A		A	B	A		C	D	A		D	A		A		A			
Cresylic Acid	C_7H_8O	C	B	C	D	B	A	A	A	A		A	C	A		D	D	B	A	D	A	C	A	A			A	
Crude Oil, sour	-	A	C	C	C	B	A	A	B	A	A		D	B	A	A	D	A		A	A		A			A		
Crude Oil, sweet	-	A	B	A	B	A	A	A	A	A	A		B	A	A	A	D	A		A	A		A			A		
Cupric Nitrate	CuN_2O_6	D				A		A	D											D			A					
Cutting Oils, Water Emulsions	-	A	A	B	B	A	A	A		A			A	A		A		A		A	A		A					
Cyanide Plating Solution	-	D	D		D	B		B	D	A						B	B	B		D			A					
Cyclohexane	C_6H_{12}	A	A	A	B	A	A	A	A	A		A	A	A		C	D	A	A	A	A	A	A	A	A		A	A
Cyclohexanone	$C_6H_{10}O$	A	B	B	B	A	A	A	B	B			B	A		D	B	D	A	A	A	C	A		A			B
Detergents, Synthetic	-	B	B	A	B	B	A	A	A	A		A	B	A		B	B	A	A	A	A	A	A	A	A		A	
Dextrin	$C_{18}H_{32}O_{16}$	B	A	B	B	B		A	B				A			B	B	B		A			A					
Dichloroethane	$C_2H_4Cl_2$	B	B		C	A	B	B	B	A		B	D	B		D	D	B	A	B	A	A	A					A
Dichloroethyl Ether	$C_4H_8Cl_2O$	B	B	A	B	B		B		A			B	A		D	C	D		C	A		A		D			
Diesel Oil Fuels	-	A	A	A	A	A	A	A	A	A		C	A	A	A	A	D	A	A	A	A	B	A	A	A			B
Diethylamine	$C_4H_{11}N$	B	C	C	B	A	A	A	B	A		B	A	A		B	C	D	A	B	A	B	A					A
Diethyl Benzene	-					B		B								D	D	A		C			A					
Diethylene Glycol	$C_4H_{10}O_3$	B	B	A	A	A	B	A	B	B		A	A	B		A	A	B	A	B	A		A					
Diethyl Sulfate	$(C_2H_5)_2SO_4$	A	B	A	B	B		B	B	A			A			C	C	B		A	A		A					
Dimethyl Formamide	C_3H_7NO	B	B	B	B	A	A	A	A	A			C	A		B	B	D		C	A	A	A			D		A
Dimethyl Phthalate	$C_{10}H_{10}O_4$					A										B	B	D		C	A		A					
Dioxane	$C_4H_8O_2$	B	A	A	B	B	A	B	A	A			A			D	C	D	A	C	A		A					
Dipentane (Pinene)	$C_{10}H_{16}$	A	A		A	A		A					A	A		B	D	B		A			A					
Disodium Phosphate	HNa_2O_4P	B	B		B	B		A	B				B			B		B		A			A					
Dowtherm	$C_{24}H_{20}O$	A	A	B	B	A	A	A	A	A			A	A		D	D	A	A	A	B		A					
Drilling Mud	-	B	B	A	A	A	A	A	A	A			B	A	A	B	A	A		A			A					
Dry Cleaning Fluids	-	A	C	B	B	A		A	A							B	A	B		D			A					
Drying Oil	-	C	C	C	B	B		B	B							B	A			A			A					
Enamel	-		A														A			B			A					
Epsom Salts	MgO_4S	B	A	C	A	B	A	B	B	B		A	B	A		B	A	A	A	B			A					A
Ethane	C_2H_6	A	B	B	A	A	A	B	B	A			A	A	A	A	D	A	A	B	A		A					

Ratings: A - Excellent B - Good C - Poor D - Do not use Blank - No Information

TECHNICAL DATA

10.19 | Chemical Compatibility Table

Media	Chemical Formula	Metals														Elastomers				Polymers								
		Aluminum	Brass	Carbon Steel	Ductile Iron / Cast Iron	316/316Ti/321 S.St	17-4PH	Alloy20	Monel	Hastelloy C®	Inconel 625	Titanium	Bronze	304 Stainless Steel	Duplex	Buna N (Nitrile)	EPDM/EPR	Viton	Flexible Graphite	Delrin®	Peek®	PVDF	Teflon® and Reinforced Teflon	PCTFE	UHMWPE®	Vespel®	PFA	KEL-F®
Ethers	H_2O	B	A	B	B	A	A	A	A	B		A	B	A	A	D	C	C	A	C	A	C	A	A	A		A	C
Ethyl Acetate	$C_4H_8O_2$	B	B	B	B	B	A	A	A	B		A	B	B		D	C	D	A	A	A	B	A		A	A		B
Ethyl Acrylate	$C_5H_8O_2$	B	B	A	B	A	A	A	A	A			A	A		D	C	D		B	A		A					
Ethyl Benzene	C_8H_{10}	A		A	B	B	B	A	A	A			B	B		C	D	A		A	A		A					
Ethyl Bromide	C_2H_5Br	B	A		B	B		C	B				B			B	B	B		A			A					
Ethyl Chloride (dry)	C_2H_5Cl	B	B	B	B	A	A	A	A	C		A	B	A		C	C	B	A	B	A	B	A					B
Ethyl Chloride (wet)	C_2H_5Cl	D	C	C	D	B	B	B	B	C			C	C		C	B	B		B	A		A					
Ethylene Chloride	C_2H_4Cl	B			C	A	B	A	A	B		B	A	B		D	D	D	A	B		B	A			A		B
Ethylene Dichloride	$C_2H_4Cl_2$	B	B	B	A	A	A	A	A	C		B	B	B		D	D	D	A	C	A	B	A		B	A		B
Ethylene Glycol	$C_2H_6O_2$	A	B	B	B	A	A	A	B	A		A	B	B	A	A	A	A	A	B	A	A	A		A	A		A
Ethylene Oxide	C_2H_4O	D	D	B	C	B	B	A	B	A			B	B		D	C	D	A	C	A	A	A					A
Ethyl Ether	C_4H10O	B	B	A	B	A	B	A	A	B		A	B	B		D	D	D		B	A	B	A					B
Ethyl Silicate	$C_8H_{20}O_4Si$	B	B		B	B		B	B	A						B	B	B		A			A					
Ethyl Sulfate	$C_4H_{10}O_4S$	A				D		B						D		B	C	A	A	A		A	A					A
Fatty Acids	R-COOH	C	C	D	D	B	A	A	A	A		A	C	B		B	D	A	A	B	A	A	A	A	A		A	A
Ferric Hydroxide	FeH_3O_3	C			D	A		A	A	B						B				A			A					
Ferric Nitrate	FeN_3O_9	D	D	D	D	B	A	A	D	A		A	D	B		A	A	A	A	D	A	A	A					A
Ferric Sulfate	$Fe_2O_{12}S_3$	D	C	D	D	B	A	A	D	B		A	D	B		A	A	A	A	D	A	A	A			A		A
Ferrous Ammonium Citrate	$C_6H(5+4y)Fe(x)N(y)O_7$	B				B		B												A			A					
Ferrous Chloride	Cl_2Fe	D	D	D	D	D	D	D	D	C		A	C	D		A	A	A	A	D	A	C	A					C
Ferrous Sulfate	FeH_2O_4S	C	C	D	D	B	A	A	A	B		A	C	B		A	A	A	A	D	A	A	A	A			A	A
Ferrous Sulfate (Saturated)	-	C	C	C	C	A		A	B	B		A				C	B	B	A	B			A					
Fertilizer Solutions	-	D	C	A	A	A	A	B	B	A			D	A		B	A	A			A		A					
Fish Oils	-	B	B	A	B	A	A	A	A	A			A	A		A	D	A		A			A					
Flue Gases	CO	C	B	A	B	A	A	A	A	A			A			C	D	C		C			A					
Fluoboric Acid	BF_4H	C			C	B	B	A	A	A		D	C	B		A	A	A	A	B		B	A			A		B
Fluorosilicic Acid	F_6H_2Si	D	B	D	D	B	B	A	A	B		D	B	C		C	C	C	A	B		C	A		A			C
Formaldehyde (cold)	CH_4	B	B	B	B	A	A	A	A	A		B	B	B		B	B	D	A	A	A	A	A	A	A	A	A	A
Formaldehyde (hot)	CH_4	B	B	C	D	C	B	B	B	B				B		B				A	A	A	A	A	A	A	A	
Formic Acid (cold)	CH_2O_2	B	D	D	D	B	A	A	A	A	B	B	C	C		D	A	B	A	C	B	A	A	A	A	A	A	B
Formic Acid (hot)	CH_2O_2	B	D	D	D	B	B	B	B	B	B	C				D		A	A	D	B	A	A	A	A	A	A	

Ratings: A - Excellent B - Good C - Poor D - Do not use Blank - No Information

QLD Ph: +617 5593 4292 | salesqld@hoseflex.com **WA** Ph: +618 9468 2840 | saleswa@hoseflex.com **VIC** Ph: +613 8566 7250 | salesvic@hoseflex.com

Media	Chemical Formula	Metals														Elastomers				Polymers								
		Aluminum	Brass	Carbon Steel	Ductile Iron / Cast Iron	316/316Ti/321 S.St	17-4PH	Alloy20	Monel	Hastelloy C®	Inconel 625	Titanium	Bronze	304 Stainless Steel	Duplex	Buna N (Nitrile)	EPDM/EPR	Viton	Flexible Graphite	Delrin®	Peek®	PVDF	Teflon® and Reinforced Teflon	PCTFE	UHMWPE®	Vespel®	PFA	KEL-F®
Freon Gas (dry)	-	B	A	B	B	A	A	A	A	B				A		C	C	C	A	A			A					
Freon 11, MF,112, BF	CCl_3F	D	A	B	C	A	A	A	A	A		B	B	A		C	C	C	A	D	D	A	A					A
Freon 12, 32, 114, 115	CCl_2F_2	B	A	B	B	A	A	A	B	A		B	B	B		B	B	B	A	B	A	C	A					C
Freon 21, 31	$CHCl_2F$	B	A	B	C	A	A	A	B	A			B	C		D	D	D	A	A								
Freon 22	$CHClF_2$	D	A	B	C	A	A	A	B	A		B	B	A		D	D	D	A	A	A	A	A					A
Freon 113, TF	$C_2Cl_3F_3$	D	A	B	C	A	A	A	B	A		C	B	C		B	D	D	A	A	B		B			A		
Freon (wet)	-	D	B		D	C	B	B	B	B			B			B	B	D	A	B			A					
Fruit Juices	-	B	D	D	D	A	A	A	B	A	A	A	B	A		A	A	A		C	A	A	D	A	A		A	A
Fuel Oil	-	B	B	A	B	A	A	A	B	A		A	A	A		A	D	A	A	A	A	A	B					A
Fumaric Acid	$C_4H_4O_4$							A								B	B	A		A			A					
Furfural	$C_5H_4O_2$	A	A	A	B	A	A	A	A	A		A	B	A		D	C	D	A	B	A	D	A					D
Gallic Acid 5%	$C_7H_6O_5$	B	C	D	D	B	B	B	B	A		B	B	B		B	C	A	B	A	B	A	A					A
Gas, Manufactured	-	C	B	B	B	B		B	A					A	A	A		A		A	A		A					
Gas, Natural	-	B	B	B	B	A	A	B	A					A	A	A	D	A		A	A		A					
Gas, Odorizers	-	A	A	B	B	B		A	B					A	A	B		A		A			A					
Gasoline (aviation)	-	A	A	A	B	A	A	A	A	A				A		C	D	A	A	A			A		A			A
Gasoline (leaded)	-	A	A	A	A	A	A	A	B	A		A	A	A		C	D	A	A	A	A	B	A		A			A
Gasoline (motor)	-	A	A	A	B	A	A	A	B	A						C	D	A	A	A			A		A			
Gasoline (refined)	$C_{12}H_{13}N_5O_6S_2$	A	B	B	B	A		A	B	A						C	D	A	A	A			A		A			
Gasoline (sour)	-	A	B	B	B	A		A	C	A			B			C	D	A	A	A			A		A			
Gasoline (unleaded)	-	A	A	A	B	A	A	A	B	A		A	A	A		C	D	A	A	A	A	B	A		A			A
Gelatine	-	A	C	D	D	A	A	A	B	A		A	B	A		A	A	A	A	B		A	A	A	A		A	
Glucose	$C_6H_{12}O_6$	A	A	B	B	A	A	A	A	A		A	A	A		A	A	A	A	A	A		A					
Glue	-	A	A	A	B	B	A	A	A	A		A	A	A		A	B	B	A	A			A					
Glycerine (Glycerol)	C_3H_8O3	A	B	B	B	B	A	A	A	A		A	A	A		C	A	A	A	A	A	A		A	A		A	A
Glycol Amine	-	C	D	A	B	B	A	A	A	B			C	B		A	D	C	A	C								
Glycol	$C_2H_6O_2$	B	B	B	B	B	A	A	A	B			A	A	A	B	A	A		C	A	A	A	A	A		A	
Graphite	CH_4	B	B		C	B		A	B					A		B	B	B		A			A					
Grease	-	B	B	A	A	A	A	A	A	A			B	A		A	D	A		B			A					
Helium Gas	He	B	B		B	A		A	B	A				A	A	B	B	B		A			A					
Heptane	$C7H_{16}$	A	A	A	A	A	A	A	A	A		A	A	A		A	D	A	A	A	A	A	A			A		A

Ratings: A - Excellent B - Good C - Poor D - Do not use Blank - No Information

TECHNICAL DATA

10.21 Chemical Compatibility Table

Media	Chemical Formula	Metals														Elastomers				Polymers								
		Aluminum	Brass	Carbon Steel	Ductile Iron / Cast Iron	316/316Ti/321 S.St	17-4PH	Alloy20	Monel	Hastelloy C®	Inconel 625	Titanium	Bronze	304 Stainless Steel	Duplex	Buna N (Nitrile)	EPDM/EPR	Viton	Flexible Graphite	Delrin®	Peek®	PVDF	Teflon® and Reinforced Teflon	PCTFE	UHMWPE®	Vespel®	PFA	KEL-F®
Hexane	C_6H_{14}	A	A	A	A	A	A	A	A	A		A	A	A		A	D	A	A	A	A	A	A					A
Hexanol, Tertiary		A	A	A	A	A	A	A	A	A			A	A		A	D	B		A			A					
Hydraulic Oil Petr. Base	-	A	B	A	A	A	A	A	A	A			A	A		A	D	A	B	B	A		A		A			
Hydrazine	H_4N_2	C	D	C	D	B	A	A	B	A			C	A		C	B	C	A	B	D	A	A		A	D	A	
Hydrocyanic Acid	CHN	C	D	D	C	A	B	A	B	A		B	D	B		B	B	A	A	C	D	A	A		A	A	A	
Hydrofluoric Acid 20%	HF	D	D	D	D	D	C	B	A	B		D	C	D		D	D	A	A	D	D	B	B	A	C			B
Hydrofluoric Acid 50%	HF	D	D	D	D	D	D	C	B	C		D	C	D		D	D	B	A	D	D	B	B	A	C			B
Hydrofluoric Acid 75%	HF	D	D	D	D	D	D			C		D	C	D		D	D	B	A	D	D	B	A	A	C			B
Hydrofluoric Acid 100%	HF	D	D	D	D	D	D			B		D	C	D		D	D	B	A	D	D	A	A	A	C			A
Hydrofluosilicic Acid	H_2SiF_6	D	B	D	D	C	B	B	B	C		D	B	C		B	B	A	B	B		B	A					B
Hydrogen Gas (cold)	H	A	A	B	A	A	A	A	A	A		A	A	A	A	B	B	A		A	A	B	A					B
Hydrogen Gas (hot)	H	C		B		B		A		A						B	B			A			A					
Hydrogen Peroxide Conc.	H_2O_2	C	D	D	D	B	A	A	C	B	A	B	D	B		D	C	B	C	D	A	B	A	A	A		A	B
Hydrogen Peroxide, Dilute	H_2O_2	C	D	D	D	B	A	A	B	A	A	B	D	B		A	B	A	B	D	A	A	A	A	A		A	A
Hydrogen Sulfide (dry)	H_2S	C	C	C	C	C	B	B	B	B		A	D	C		C	A	D	A	C	A	B	A	A	A	A	A	B
Hydrogen Sulfide (wet)	H_2S	C	C	C	D	C	C	B	C	B		B	D	C		C	B	D	A	C	A	B	A	A	A	A	A	B
Hypo (Sodium Thiosulfate)	$Na_2S_2O_3$	B	C	D	D	B	A	B	B				B	B		C	A	A		A	A		A					A
Iluminating Gas	-	A	A	A	A	A		A	A							A	D	A		A			A					
Ink-Newsprint	$C_{11}H_{16}O_3P+$	C	C	D	D	A	B	A	B	A			B	C		A	B	A		B			A					
Iodoform	CHI_3	C	C	B	C	A	A	A	C	B		B	C	A		D	A	A		A			C					
Iso-Butane	C_4H_{10}	A	A	B	A	A	A	A	A	A			A	A		B	D	A		A	A		A					
Iso-Octane	C_8H_{18}	A	A	A	B	A	A	A	A	A			A	A		A	D	A	A	A	A	B	A		A			B
Isopropyl Acetate	$C_5H_{10}O_2$	B		B	C	B	A	A	A	A			B	B		D	D	D	A	D	A		A					
Isopropyl Ether	$C_6H_{14}O$	A	A	A	B	A	A	A	A	A			A	A		C	D	D	A	D	A	B	A		A			A
JP-4 Fuel	-	A	A	A	A	A	A	A	A	A		A	A	A		A	D	A	A	A	A	A	A					A
JP-5 Fuel	-	A	A	A	A	A	A	A	A	A		A	A	A		B	D	A	A	A	A	A	A					A
JP-6 Fuel	-	A	A	A	A	A	A	A	A	A			A	A		A	D	A	A	A	A	A	A					A
Kerosene	-	B	A	B	B	A	A	A	A	A		A	A	A	A	A	D	A	A	A	A	A	A		A			A
Ketchup	-	C		C	C	A	A	A	A				C			A		A		A	A		A					
Ketones	CH_2O	B	A	A	A	A	A	A	A	A		A	A	A		D	D	D	A	D	A	D	A	A	A			C
Laquer (and Solvent)	-	A	C	D	C	B	B	A	A	A		B	A	B		D	D	D	A	D	A		A					

Ratings: A - Excellent B - Good C - Poor D - Do not use Blank - No Information

QLD Ph: +617 5593 4292 | salesqld@hoseflex.com **WA** Ph: +618 9468 2840 | saleswa@hoseflex.com **VIC** Ph: +613 8566 7250 | salesvic@hoseflex.com

Media	Chemical Formula	Metals														Elastomers				Polymers								
		Aluminum	Brass	Carbon Steel	Ductile Iron / Cast Iron	316/316Ti/321 S.St	17-4PH	Alloy20	Monel	Hastelloy C®	Inconel 625	Titanium	Bronze	304 Stainless Steel	Duplex	Buna N (Nitrile)	EPDM/EPR	Viton	Flexible Graphite	Delrin®	Peek®	PVDF	Teflon® and Reinforced Teflon	PCTFE	UHMWPE®	Vespel®	PFA	KEL-F®
Lactic Acid Concentrated (cold)	$C_3H_6O_3$	C	D	D	D	A	A	A	A	B		A	D	B		B	B	A	A	C	A	B	A	A	A	A		B
Lactic Acid Concentrated (hot)	$C_3H_6O_3$	C	D	D	D	B	B			B		A	D	B		C	C	B	A	C	A	C	A	A	A	A		
Lactic Acid Dilute (cold)	$C_3H_6O_3$	B	D	D	D	A	A	A	A	A		A	C	B		B	A	A	A	B	A	B	A		A	A		B
Lactic Acid Dilute (hot)	$C_3H_6O_3$	B	D	D	D	A	B			B		A	C	B		C	C	B	A	B	A	C	A		A	A		
Lactose	$C_{12}H_{22}O_{11}$	B	B		C	B		B	B							B	B	B		A			A					
Lard	-	A	B		A	A	A	A	B	A		A	A	A		B	C	A	A	A		A	A					
Lard Oil	-	B	B	C	C	B		A	B	A			C	A		A	B	A		A	A		A					
Lead Acetate	$C_4H_6O_4Pb$	D	C	C	D	B	B	B	B	B		A	C	B		A	B	D	A	B	A	A	A				A	A
Lead Sulfate	O_4PbS	D	C	C	D	B	B	B	B	B			B	C		B	B	B	A	A			A					
Lecithin	$C_{46}H_{89}NO_8P+$	B	C	C	C	B		B	B	A			A	A		D	D	B		A			A					
Linoleic Acid	$C_{18}H_{32}O_2$	B	C	C	B	B	B	A	A	A			C	B		B	D	B	A	B	A	A	A					
Linseed Oil	-	A	A	A	A	A	A	A	A	A	A	A	B	A		A	D	A		A	A		A		A			
Lithium Chloride	ClLi	C	B	C	B	B	A	A	A	A			B	A		B	B	B	A	A	A	A	A					
Liquid Petroleum Gas (LPG)	$C_3H_7NO_2$	A	A	A	B	B		B	B	A			A	A		A	D	A		A	A		A					
Lubricating Oil Petroleum Base	C_6H_6	A	A	A	A	A	A	A	A	A		A	A	A		A	D	A	A	A	A	A	A					
Ludox	O_2Si	C	D	A	B	B	A	A	A	A			C			B	B	B		B			A					
Magnesium Bisulfate	$HMgO_4S+$	D	B	B	B	A	A	A	B				A	A		B	B	B	B	A			A					
Magnesium Bisulfade	-	C	D		D	B		B	B							B	B	B		A			A					
Magnesium Carbonate	$CMgO_3$	A	B	B	B	A	A	A	A	B		A	B	B		B	B	B		A	A	A	A					
Magnesium Chloride	Cl_2Mg	D	C	C	D	C	D	C	B	A		A	B	D		A	A	A	A	A	B	A	A		A	A		A
Magnesium Hydroxide	H_2MgO_2	D	B	B	B	A	A	A	B	A		A	B	B		A	A	A	A	A	A	A	A					A
Magnesium Hydroxide (hot)	H_2MgO_2	D	C	B	B	A	A	A	A	B				B		B		A		A			A					
Magnesium Nitrate	MgN_2O_6	B	C	B	B	A		A	B	A		A	C	B		B	A	B		A	A	A	A					
Magnesium Sulfate	MgO_4S	B	B	B	B	A	A	A	B	B		A	C	A		A	A	A	A	A	A	A	A					A
Maleic Acid	$C_4H_4O_4$	B	B	C	C	B	B	A	B	B		A	B	A		B	D	A	A	A	A	A	A	A	A	A	A	
Maleic Anhydride	$C_4H_2O_3$	B	B		B	B	A	B	B	A				A		D	D	B		D		A	A					
Malic Acid	$C_4H_6O_5$	B	B	D	D	B	A	B	B	B	A	A	C	A		A	D	A	B	A		A	A		A			
Malt Beverages	-					A		B	A							A	B	A		A			A					
Manganese Carbonate	-	B				B		A								B				A			A					
Manganese Sulfate	MnO_4S	B	D	B	D	A	B	A	A	A		A	A	B		B	B	B	A	B	A	A	A					B
Mayonnaise	-	D		D	D	A	B	A	B	A			D	B		A		A		A		A	A					

Ratings: A - Excellent B - Good C - Poor D - Do not use Blank - No Information

TECHNICAL DATA

10.23 | Chemical Compatibility Table

Media	Chemical Formula	Metals														Elastomers				Polymers								
		Aluminum	Brass	Carbon Steel	Ductile Iron / Cast Iron	316/316Ti/321 S.St	17-4PH	Alloy20	Monel	Hastelloy C®	Inconel 625	Titanium	Bronze	304 Stainless Steel	Duplex	Buna N (Nitrile)	EPDM/EPR	Viton	Flexible Graphite	Delrin®	Peek®	PVDF	Teflon® and Reinforced Teflon	PCTFE	UHMWPE®	Vespel®	PFA	KEL-F®
Meat Juices	-	B	D			A		A								B				A		A	A	A			A	
Melamine Resins	$C_3H_6N_6$		D		D	C	C	C		A			D	C		B	A	A	C	A			A					
Methanol	CH4O	A	A	A	A	A	A	A	A	A		B	A	A		B	D	B	A	A	A	A	A		A			
Mercuric Chloride	Cl_2Hg	D	D	D	D	D	D	C	D	B		A	D	D		A	A	A	C	B	A	A	A	A	A		A	B
Mercuric Cyanide	C_2HgN_2	D	D	D	D	B	C	A	D	A		A	D	C		A	B	A		A	B	A	B					D
Mercurous Nitrate	$HgNO_3$	D	D	D	D	A	A	A	D	A		A	D	A		B		B	C	A	B	A	A					
Mercury	Hg	C	D	A	A	A	A	A	B	A		A	A	A		A	A	A	C	A	A	A	A	A	A		A	A
Methane	CH_4	A	A	A	A	A	A	A	A	A			A	A	A	A	D	A	B	A	A	A	A					
Methyl Acetate	$C_3H_6O_2$	A	A	B	B	A	A	A	A	A			B	A		D	B	D	A	B	A	C	A					A
Methyl Acetone	C_4H_8O	A	A	A	A	A	A	A	A	A			A	A		D	A	D	B	D		D	A					
Methyl Amine	CH_5N	B	C	B	B	A	A	A	C	B			D	A		D	B	D		A	A		A					
Methyl Bromide 100%	CH_3Br	C	C	C	D	B	B	B	B	B			D	B		B	D	A	A	D	B	A						
Methyl Cellosolve	$C_3H_8O_2$	B	A	B	B	A	A	A	A	A			A	B		C	B	D	A	D	A	A	A					
Methyl Cellulose	-					A		A		B						D				C			A					
Methyl Chloride	CH_3Cl	D	C	A	B	A	A	A	A	A		A	B	A		D	D	B	A	C		A	A			A		B
Methyl Ethyl Ketone	C_4H_8O	B	A	A	A	A	A	A	A	A		A	A	A		D	B	D	A	B	B		A		A			B
Methylene Chloride	CH_2Cl_2	C	B	B	B	A	A	A	A	A		B	B	B		D	D	C	A	B	A	C	A		B		A	A
Methyl Formate	$C_2H_4O_2$	B		C	B	A	A	A	A	A			A	A		D	B	D		A			A					
Methyl Isobutyle Ketone	$C_6H_{12}O$	B			B	B	A	A	A	A		A	A	A		D	C	D	A	C	B	D	A					A
Milk & Milk Products	-	C	C	C	D	A	A	A	A	A	A	A	B	A		A	A	A	A	A	A	A	A	A	A		A	A
Mineral Oils	-	A	A	A	B	A	A	A	A	A		A	A	A		A	D	A		A	A		A		A			
Mineral Spirits	-	A	B	B	B	B	A	B	B	B		B	B	A		A	D	A	A	A	A		A					A
Mixed Acids (cold)	-	D	D	C	C	B		B	C							D	D	B		D			A					
Molasses, crude	-	B	B	A	A	A	A	A	A	A		A	A	A		A	B	A	A	A	A	C	A	A	A			A
Molasses, Edible	-	A	B	A	C	A	A	A	A	A			A	A		A	B	A	A	A	A	B	A	A	A			A
Molybdic Acid	H_2MoO_4					A		A												A			A					
Monochloro Benzene (dry)	C_6H_5Cl	B		B	A	A	A	A	A	A			B	B		D	D	B	A	C	B		A					
Morphine	$C_{17}H_{19}NO_3$	B	B	B	B	A		A	B							D	B	D		A			A		A			
Mustard	$C_4H_8Cl_2S$	B	A	B	B	A		A	A	A		A	B	A		A	A	A	A	C		A	A					
Naptha	-	A	A	A	B	A	A	A	A	A		A	A	A		B	D	A	A	B	A	A	A	A	A		A	A
Napthalene	$C_{10}H_8$	A	B	A	B	A	A	A	A	A		A	A	A		D	D	A	A	B	A	A	A		A		A	A

Ratings: A - Excellent B - Good C - Poor D - Do not use Blank - No Information

QLD Ph: +617 5593 4292 | salesqld@hoseflex.com **WA** Ph: +618 9468 2840 | saleswa@hoseflex.com **VIC** Ph: +613 8566 7250 | salesvic@hoseflex.com

Media	Chemical Formula	Metals														Elastomers				Polymers								
		Aluminum	Brass	Carbon Steel	Ductile Iron / Cast Iron	316/316Ti/321 S.St	17-4PH	Alloy20	Monel	Hastelloy C®	Inconel 625	Titanium	Bronze	304 Stainless Steel	Duplex	Buna N (Nitrile)	EPDM/EPR	Viton	Flexible Graphite	Delrin®	Peek®	PVDF	Teflon® and Reinforced Teflon	PCTFE	UHMWPE®	Vespel®	PFA	KEL-F®
Natural Gas, Sour	-	B	A	A	B	A	A	A	B	A			A	A		A	D	A		B	A		A					
Nickel Ammonium Sulfate	$H_8N_2NiO_8S_2$	D	D	D	D	A		A	C				D			A	B	B		C	A		A	A				
Nickel Chloride	Cl_2Ni	D	D	D	D	B	B	A	C	A		A	D	D		A	B	A	A	A	A	A	A	A				A
Nickel Nitrate	N_2NiO_6	D	D	D	D	B	A	A	C	B		B	C	B		A	A	A	A	C	A	A	A	A				A
Nickel Sulfate	NiO_4S	D	D	D	D	B	B	A	B	C		B	C	B		A	B	A	A	B	A	A	A	A				A
Nicotinic Acid	$C_6H_5NO_2$	A	A	C	C	A		A	B				B			D	D	B		C			A		B			
Nitric Acid 10%	HNO_3	C	D	D	D	B	A	A	D	B		A	D	A		C	B	A	A	D	A	A	A	A	A	D	A	B
Nitric Acid 30%	HNO_3	D	D	D	D	B	B	A	D	A		A	D	A		C	C	A	C	D	B	B	A	A	A		A	B
Nitric Acid 80%	HNO_3	D	D	D	D	B	C	A	D	B		B	D	A		D	D	B	D	D	D	B	A	A	B		A	B
Nitric Acid 100%	HNO_3	B	D	D	D	B	C	A	D	B		B	D	A		D	D	B	D	D	D	B	A	A			A	B
Nitric Acid Anhydrous	-	B	D	D	C	B	D	A	D				D	B		D	D	A	C	D			A					
Nitrobenzene	$C_6H_5NO_2$	B	D	A	B	A	B	A	B	B		A	B	B		D	C	C	B	B	D	B	A	A	A	A	A	B
Nitrogen	N_2	A	A	A	A	A	A	A	A	A		A	A	A	A	A	B	A	A	A	A		A					
Nitrous Acid 10%	HNO_2	D	D	D	D	B	B	B	D	C			C	B		C	A	A		B	B	B	A					B
Nitrous Gases	-	B	D	B	C	A		A	D											B			A		A			
Nitrous Oxide	N_2O	B	B	B	C	B	B	B	D	B			C	B		B	A	A	B	A	A	D	A					
Oils&Fats	-	B				A		A								B	D			A		A	A	A			A	
Oils&Animal	-	A	A	A	A	A		A	B	A						A	B	B		A		A	A	A			A	
Oils, Petroleum (refined)	C_6H_6	A	B	A	B	A	A	A	A	A			C	A	A	A	A	D		B	A		A					
Oils, Petroleum (sour)	C_6H_6	A	C	B	C	A	A	A	A	A			C	A	A	A	A	D		B			A					
Oils, Water Mixture	-	A	A	B	B	A	A	A		A			A	A		A	D	A		A	A		A					
Olaic Acid	-	B				B		B	A	A							C			D			A					
Oleic Acid	$C_{18}H_{34}O_2$	B	D	C	C	B	A	A	B	B		B	C	A		B	D	C	A	C	A	A	A			A		B
Oleum	H_2O_4S	C	C	B	D	B	B	B	C	B		D	D	B		D	C	A	C	D	D	D	A			D		A
Oleum Spirits	-	D	D		D	B		B	D							C	D	A		D		C	A					
Olive Oil	-	A	B	B	A	A	A	A	A	A		A	A	A		A	B	A	A	A	A		A	A			A	
Oxalic Acid	$C_2H_2O_4$	C	C	C	D	B	B	B	B	B		A	C	B		C	B	A	A	C	C	A	A	A	A	A	A	D
Oxygen	O_2	A	A	A	A	A	A	A	A	A		A	A	A	A	B	A	A	A	D	A		A					
Ozone (dry)	O_3	A	A	A	A	A	A	A	A	A			A	B		D	A	B	C	C	A	B	A	A	B		A	A
Ozone (wet)	O_3	B	B	B	C	A		A	A	A			B			D	B	B		C	A	B	A	A	B		A	
Paints & Solvents	-	A	A	A	A	A		A	A					A		D	D	B		A			A					

Ratings: A - Excellent B - Good C - Poor D - Do not use Blank - No Information

TECHNICAL DATA

10.25 | Chemical Compatibility Table

Media	Chemical Formula	Metals														Elastomers				Polymers								
		Aluminum	Brass	Carbon Steel	Ductile Iron / Cast Iron	316/316Ti/321 S.St	17-4PH	Alloy20	Monel	Hastelloy C®	Inconel 625	Titanium	Bronze	304 Stainless Steel	Duplex	Buna N (Nitrile)	EPDM/EPR	Viton	Flexible Graphite	Delrin®	Peek®	PVDF	Teflon® and Reinforced Teflon	PCTFE	UHMWPE®	Vespel®	PFA	KEL-F®
Palmitic Acid	$C_{16}H_{32}O_2$	B	C	C	C	B	A	A	A	A			B	B		B	B	A	A	A	A	B	A					
Palm Oil	-	A	B	C	C	B	A	A	A	A		A	C	A		B	D	A		D	A	A	A					
Paper Pulp	-	C	B		B	A		A	B							B	B	B		A								
Paraffin	C_nH_{2n+2}	A	A	B	B	A	A	A	A	A		A	A	A		A	D	A	A	A	A	A	A	A	A		A	
Paraformaldehyde	CH_2O	B	B	B	B	B		B	B	A						B	C			A			A					
Paraldehyde	$C_6H_{12}O_3$					B		B		A						B	D		A	A			A					
Pentane	C_5H_{12}	A	A	B	B	B	A	A	A	B			B	B		A	D	A	A	B	A	A	A					
Perchlorethylene (dry)	C_2Cl_4	B	C	B	B	A	A	A	B	A		A	B	B		D	D	A	A	B	A	A	A					A
Petrolatum (Vaseline Petr. Jelly)	-	B	B	C	C	B	A	A	A	A			A	A		A	A	A	A	B		A	A					
Phenol	C_6H_6O	A	D	C	D	A	A	A	A	A	A	B	A	B		D	B	B	A	C	D	B	A	A	A	A	A	B
Phosphate Ester 10%	-	C	D	A	C	A		A	A	A			C			D	A			A			A		A			
Phosphate Acid 10%	-	C	D	D	D	C	B	B	D							B	B	A	A	D			A		A			
Phosphoric Acid 50% (cold)	H_3O_4P	D	D	D	D	C	B	B	D	B		B	D	D		B	B	A	A	D	A	B	A	A	A	A	A	A
Phosphoric Acid 50% (hot)	H_3O_4P	D	D	D	D	C	C	B	D	B		C	D	D		B	B	A	A	D	A	B	A	A	A	A	A	A
Phosphoric Acid 85% (cold)	H_3O_4P	D	D	D	D	C	C	B	D	B		B	D	D		C	B	B	A	D	A	B	A	A	A	A	A	A
Phosphoric Acid 85% (hot)	H_3O_4P	D	D	D	D	C	D	B	D	B		C	D	D		C	B		A	D	B	B	A	A	A	A	A	A
Phosphoric Anhydride	P_2O_5	C		D		A	B	A				D	C	B		D		D	A	D	A	D	A					
Phosphorus Trichloride	PCl_3	C		B	C	A	A	A	A	B		A		A		D	B	B	A	D			A		A			A
Phthalic Acid	$C_8H_6O_4$	C	B	D	C	B	A	A	B	A		A	B	B		C	C	A	B	C	A	B	A	A	A	A	A	
Phthalic Anhydride	$C_8H_4O_3$	B	B	D	C	B	A	B	A	A			B	A		C	B	A	A	C	A	A	A					
Picric Acid	$C_6H_3N_3O_7$	C	D	D	D	B	B	B	D	B		A	C	B		C	B	A	A	B	A	B	A				A	A
Pineapple Juice	-	A	C	C	C	A		A	A							A		A		A			A					
Pine Oil	-	B	B	B	B	A	A	A	A	A		A	C	A		A	D	A		D		A	A					
Pitch (Bitumen)	C_6H_6					A		A								C	D			A			A					
Polysulfide	-	C	D		B	B		A	B							B	B	B		C			A					
Polyvinyl Acetate	$C_6H_{12}O_2$	B	B	C	B	B	B	B	B	A			B	A			B			A	A		A					
Polyvinyl Chloride	C_2H_3Cl	B	D		B	B		B	B								B			A			A					
Potassium Bicarbonate	$CHKO_3$	C		A	D	A	B	A	B	B		A	C	B		B	A	A	A	B	A	B	A			D		A
Potassium Bichromate	$Cr_2K_2O_7$	B	B	B		A		A	A							B		B		B	C		A		A			
Potassium Bisulfate	HKO_4S	B		C	C	A		A	C				C			B	B	A		A			A					
Potassium Bisulfite	HKO_4S	C	C	D	D	B		B	D							A	B	A		A			A					

Ratings: A - Excellent B - Good C - Poor D - Do not use Blank - No Information

QLD Ph: +617 5593 4292 | salesqld@hoseflex.com **WA** Ph: +618 9468 2840 | saleswa@hoseflex.com **VIC** Ph: +613 8566 7250 | salesvic@hoseflex.com

Media	Chemical Formula	Metals														Elastomers				Polymers								
		Aluminum	Brass	Carbon Steel	Ductile Iron / Cast Iron	316/316Ti/321 S.St	17-4PH	Alloy20	Monel	Hastelloy C®	Inconel 625	Titanium	Bronze	304 Stainless Steel	Duplex	Buna N (Nitrile)	EPDM/EPR	Viton	Flexible Graphite	Delrin®	Peek®	PVDF	Teflon® and Reinforced Teflon	PCTFE	UHMWPE®	Vespel®	PFA	KEL-F®
Potassium Bromide	BrK	C	C	C	D	A	B	B	B	B		A	C	B		A	B	A	A	A	A	A	A					A
Potassium Carbonate	CK_2O_3	C	B	B	B	A	A	A	A	A		A	C	B		A	B	A	A	B	A		A			D		
Potassium Chlorate	$ClKO_3$	B	B	B	B	A	A	A	A	A		A	C	B		A	B	A	B	B	A	A	A					A
Potassium Chloride	KCl	D	C	C	B	B	B	A	B	A		A	C	B		A	A	A	A	A	A	A	A		A			A
Potassium Chromate	CrK_2O_4	B	B	B	B	B	A	A	A	A			A	B		B	B	A	A	C		B	A					
Potassium Cyanide	KCN	D	D	B	B	B	A	A	A	A		A	D	B		A	A	A	A	C		A	A		A			A
Potassium Dichromate	$Cr_2K_2O_7$	B	D	C	C	B	A	A	A	B		A	C	B		A	B	A	B	B	A	A	A			D		A
Potassium Ferricyanide	$C_6FeK_3N_6$	C	D	C	C	A	B	A	A	B		A	D	B		A	B	A	A	C	A	B	A					B
Potassium Ferrocyanide	$C_6FeK_4N_{6+4}$	C	C	C	C	B	A	A	A	B		A	C	B		A	A	A	A	A	A	A	A					A
Potassium Hydroxide Dilute (cold)	HKO	D	D	B	D	B	A	A	A	A	B	C	D	B		A	A	D	B	C	A	A	A			D		B
Potassium Hydroxide to 70% (cold)	HKO	D	D	C	D	B	B	B	A	B		C	D	B		B	B	D		C	A		A			D		
Potassium Hydroxide Dilute (hot)	HKO	D	D	B	D	B	C	B	A	A		D	D	B		B	A			D	A		A			D		
Potassium Hydroxide to 70% (hot)	HKO	D	D	C	D	B	C	B	A	B		D	D	B		C	B			D	A		A			D		
Potassium Iodide	IK	B	C	B	B	B	A	A	B	B		A	D	A		A	B	A	B	A		B	A					
Potassium Nitrate	KNO_3	B	B	B	B	B	A	A	A	A		A	B	B		A	B	A	B	B	A	A	A			A		
Potassium Oxalate	$C_2K_2O_4$	B			A	B	B	A		A		A	A	B					B	A			A					
Potassium Permanganate	$KMnO_4$	B	B	B	B	A	A	A	A	A	A	A	B	B		A	B	A	C	C	A	A	A		A	D		
Potassium Phosphate (mono)	KH_2PO_4	D	C		C	B	A	B	B	B				A		A	A	A		A			A					
Potassium Phosphate Di-basic	K_2HPO_4	B	B	A	A	A		A	B	B						A	B	A		A			A					
Potassium Phosphate Tri-basic	K_3PO_4	D		A	A	B		B	B							B	B						A					
Potassium Sulfate	K_2O_4S	B	C	B	B	A	A	A	A	A		A	B	B		A	A	A	A	B	A	A	A					B
Potassium Sulfide	HK_2S+	C	D	D	C	A	B	B	D	B		A	D	B		A	B	A	A	A	A	A	A					A
Potassium Sulfite	K_2O_3S	B	B	D	C	A	B	A	C	B		A	C	B		B	A	A		A			A					
Producer Gas	-	B	B	B	B	B	A	B	A					A		A	D	A		A			A					
Propane Gas	C_3H_8	A	A	A	A	A	A	A	B	A		A	B	A	A	A	D	A	A	B	A	A	A					A
Propyl Bromide	C_3H_7Br	B	B	B	B	A		A	B				B			B	B	B		A			A					
Propylene Glycol	$C_3H_8O_2$	C	B	B	B	B	A	A	A	A		A	A	B		A	B	A	A	B	A		A		A			
Pyridine	C_5H_5N	B	B	B	B	B	A	A	C	B		B	B	B		D	B	D	A	B	B	D	A	A	A	A	A	B
Pyrolgalic Acid	-	B	B	B	B	B	A	A	A	A		A	A	B		A	B	A	A	D	A	A	A					A
Quench Oil	-	A	B	B	B	A		A		A						A		A		A			A					
Quinine Sulfate (dry)	$C_{40}H_{50}N_4O_8S$				A	A	B	A	B	A				B						A			A					

Ratings: A - Excellent B - Good C - Poor D - Do not use Blank - No Information

TECHNICAL DATA

10.27 | Chemical Compatibility Table

Media	Chemical Formula	Metals														Elastomers				Polymers								
		Aluminum	Brass	Carbon Steel	Ductile Iron / Cast Iron	316/316Ti/321 S.St	17-4PH	Alloy20	Monel	Hastelloy C®	Inconel 625	Titanium	Bronze	304 Stainless Steel	Duplex	Buna N (Nitrile)	EPDM/EPR	Viton	Flexible Graphite	Delrin®	Peek®	PVDF	Teflon® and Reinforced Teflon	PCTFE	UHMWPE®	Vespel®	PFA	KEL-F®
Resins & Rosins	-	A	A	A	A	A		A	A							B		A		A			A					
Resorcinal	$C_6H_6O_2$	A	B	C	C	A	A	A	A	A		A	B	A		D		B		B			A					
Road Tar	$C_2H_4O_3$	A	A	A	A	A		A	A							B		A		A			A					
Roof Pitch	-	A	A	B	B	A		A										A		A			A					
Rosin Emulsion	$C_{15}H_{20}O_6$	A	A	A	A	A	A	A	A	A		A	A	A		D		C		C	A		A					
R P-1 Fuel	-	B	B	C	C	B		A	B	A						A	B	A		B			A	A				
Rubber Latex Emulsions	-	C	C	D	D	A	B	B	C	A		A	B	B		A	B	B	A	C	A	A	A					B
Rubber solvents	-	B	B	C	C	B		A	A			A	B	A		A		A		A		A	A					
Salad Oil	-	B	B		D	B	B	B	B	B		A	B	B		A	A	B	A	A		A	A					
Salicylic Acid	$C_7H_6O_3$					B		B												C			A					
Salt (NaCl)	$NaCl+H_2O$	B	D	C	D	B	B	B	A	A	A	A	A	C	B	A	A	B	A	A		A	A	A	A		A	A
Salt Brine	NaCl	C	C	C	D	B	A	B	B	A			C	B	B	A	B	B		B	A		A					
Sauerkraut Brine	-	A	B	A	B	A	A	A	A	A			A	A		A	A	A	A	A			A					
Sea Water	-	B	B		B	B		B								B		B	A	A	A	A	A	A	A		A	
Sewage	-	D				C	C	A	B	A			D	D						D			A					A
Shellac	-	D	D	D	D	B		B	B	A			D			B		B		D			A					
Silicone Fluids	Si	D	D	D	D	A	B	A	D	A		A	D	B		C	A	A	A	A	A	A	A	A	A		A	A
Silver Bromide	AgBr	B				A		A		A		A				A	A	A					A					
Silver Cyanide	CAgN	C	B	B	B	A	A	A	B	A		A	B	A		A	A	A	A	A	A	B	A					
Silver Nitrate	CAgN	B	B	C	C	B	B	A	B	A		A	B	B		B	A	D	A	B	A	A	A					A
Silver Plating sol.	-	D	B	B	C	A	A	B	B	B		B	B	A		A	A	A	A	B	A		A					
Soap Solutions (Stearates)	$C_{21}H_{42}O_4$	B				B		B	A	A		A	A			B		B	A	B	A	B	A		A			
Sodium Acetate	$C_2H_4O_2$	C	B	C	C	B	A	A	A	A		A	B	A		A	A	A	A	A	A	A	A			D		A
Sodium Aluminate	$AlNaO_2$	B				A	A	A	A	B			C			D			C	A	A		A					
Sodium Benzoate	$C7H6O_2$	D	D	D	D	A	A	A	B	B		B	C	A		A	B	A	A	B		A	A					A
Sodium Bicarbonate	$CHNaO_3$	C	B	D	D	A	B	B	C	B		A	B	B		A	B	A	A	C		A	A					
Sodium Bichromate	$Cr_2Na_2O_7$	C	B	C	C	B	A	A	A	A		B	A	B		A	B	A		A		A	A		A			
Sodium Bisulfate 10%	H_2NaO_4S	D	B	C	D	B	B	B	B	B		A	B	C		A	B	A	A	A	A	B	A					B
Sodium Bisulfite 10%	$HNaO_3S$	D	B	D	D	A		B	B	B						A	B	A		D			A					
Sodium Borate	$C_{15}H_{22}O_2$	B	B	C	C	B		B	B							A	B	A		A			A		A			
Sodium Bromide 10%	BrNa	B	B	C	D	B		B	B							A	B	A		A			A					

Ratings: A - Excellent B - Good C - Poor D - Do not use Blank - No Information

QLD Ph: +617 5593 4292 | salesqld@hoseflex.com **WA** Ph: +618 9468 2840 | saleswa@hoseflex.com **VIC** Ph: +613 8566 7250 | salesvic@hoseflex.com

Media	Chemical Formula	Metals														Elastomers				Polymers								
		Aluminum	Brass	Carbon Steel	Ductile Iron / Cast Iron	316/316Ti/321 S.St	17-4PH	Alloy20	Monel	Hastelloy C®	Inconel 625	Titanium	Bronze	304 Stainless Steel	Duplex	Buna N (Nitrile)	EPDM/EPR	Viton	Flexible Graphite	Delrin®	Peek®	PVDF	Teflon® and Reinforced Teflon	PCTFE	UHMWPE®	Vespel®	PFA	KEL-F®
Sodium Carbonate (Soda Ash)	CNa_2O_3	D	B	B	B	B	A	A	B	A		A	B	A		A	B	A	A	B	A	A	A	A	A	D	A	A
Sodium Chlorate	$ClNaO_3$	C	B	B	C	B	A	B	C	B		A	B	A		A	B	A	C	A	A	A	A					
Sodium Chloride	ClNa	B	C	B	C	B	B	B	B	A		A	B	B		A	A	A	A	B	A	A	A		A	A		A
Sodium Chromate	$CrNa_2O_4$	B	C	B	B	A	A	A	A	B			B	B		A	B	A	B	D	A	A	A					A
Sodium Citrate	$C_6H_5Na_3O_7$	D				A		B		A										A			A					
Sodium Cyanide	CNNa	D	D	B	B	A	B	A	B	A		A	D	A		A	A	A	A	A		A	A			A		A
Sodium Ferricyanide	$C_6FeN_6Na_3$	B			C	B	B	A	B	B			C	B						A			A			A		
Sodium Fluoride	FNa	B	C	D	D	B	B	A	B	A		A	B	D		A	B	A	A	A	A	A	A					
Sodium Hydroxide 20% (cold)	NaOH	D	C	A	A	A	A	B	A	A	A	A	B	B		A	B	B	A	B	A	A	A		A	D		A
Sodium Hydroxide 20% (hot)	NaOH	D	C	B	B	A	B	B	B	A	A		B			B	B	C	A	C		A	A		A	D		
Sodium Hydroxide 50% (cold)	NaOH	D	D	A	B	A	A	B	A	A		A	D	B		A	B	C	A	C	A	A	A		A	D		B
Sodium Hydroxide 50% (hot)	NaOH	D	D	B	B	A	B	B	B	B			D			B	C	C	A	C		A	A		A	D		
Sodium Hydroxide 70% (cold)	NaOH	D	D	C	B	A	A	B	A	A		A	D	C		B	C	D	A	D	A	A	A		A	D		A
Sodium Hydroxide 70% (hot)	NaOH	D	D	C	B	A	B	B	B	B			D			D	C	D	A	D		A	A		A	D		
Sodium Hypochlorite (Bleach)	ClNaO	D	D	D	D	D	D	D	D	A		C	D	D		B	C	B	B	D	B	A	A		A	D		A
Sodium Hyposulfite	$Na_2S_2O_4$	B				B		B	B											A			A					
Sodium Lactate	$C_3H_5NaO_3$	D				A		A	B											A			A					
Sodium Metaphosphate	$Na_6O_{18}P_6$	C	D	C	B	B	A	A	B	A			B	A		A	A	A	A	B	A	A	A					
Sodium Metasilicate (cold)	Na_2O_3Si	D	B	B	C	A	A	A	A	A			A	A		B	B	B		D	A		A					
Sodium Metasillicate (hot)	Na_2O_3Si	D	B	C	D	A	A	A	A	A										D			A					
Sodium Nitrate	$NNaO_3$	B	B	B	B	A	B	A	B	B		A	B	B		C	A	A	C	A	A	A	A		A	A		A
Sodium Nitrite	$NNaO_2$	A		B	B	B	A	A	B	B			B	A		C	A	B		B	A		A					
Sodium Perborate	$BNaO_3$	C	D	B	C	C	A	A	A	A			B	B		C	A	A	C	B	A		A					A
Sodium Peroxide	Na_2O_2	C	C	C	D	B	A	A	A	B			D	A		C	A	A	A	D	A	A	A	A	B		A	A
Sodium Phosphate (mono)	NaH_2PO_4	D	C	B	D	B	A	A	B	A		A	C	B		B	A	A		B	A		A					
Sodium Phosphate Di-basic	Na_2HPO_4	D	C	C	C	B	A	B	B	A		A	C	A		A	A	A	A	A	A		A					
Sodium Phosphate Tri-basic	Na_3PO_4	D	C	C	C	B	A	B	B	A		A	C	A		B	A	A		A			A					
Sodium Polyphosphate	$Na_6O_{18}P_6$	D	D		D	B	B	B	B	A		A	C	B		B	A	A	A	B		A	A					A
Sodium Salicylate	$C_7H_5NaO_3$				A	A		A									A			C			A					
Sodium Silicate	Na_2O_3Si	B	C	B	B	B	A	A	A	A		A	D	A		A	A	A	A	C	A	A	A	A	A		A	A
Sodium Silicate (hot)	Na_2O_3Si	C	D	C	C	B	B	B	B	B			D				B		A	C			A		A		A	

Ratings: A - Excellent B - Good C - Poor D - Do not use Blank - No Information

TECHNICAL DATA

10.29 | Chemical Compatibility Table

Media	Chemical Formula	Metals														Elastomers				Polymers								
		Aluminum	Brass	Carbon Steel	Ductile Iron / Cast Iron	316/316Ti/321 S.St	17-4PH	Alloy20	Monel	Hastelloy C®	Inconel 625	Titanium	Bronze	304 Stainless Steel	Duplex	Buna N (Nitrile)	EPDM/EPR	Viton	Flexible Graphite	Delrin®	Peek®	PVDF	Teflon® and Reinforced Teflon	PCTFE	UHMWPE®	Vespel®	PFA	KEL-F®
Sodium Sulfate	Na_2O_4S	A	B	B	B	A	A	A	A	A		A	B	B		A	A	A	A	B	A	A	A			A		A
Sodium Sulfide	HNaS	D	D	C	B	B	A	A	A	B		A	D	B		A	A	A	A	B	A	A	A	A	A		A	B
Sodium Sulfite	NaO_3S-	C	C	B	A	A	A	A	C	A		A	B	B		A	A	B	A	A		A	A					A
Sodium Tetraborate	$C_{15}H_{22}O_2$	C	D		A	A	A	A		B			B	A		A	A	A	A	B			A					
Sodium Thiosulfate	$Na_2S_2O_3$	A	D	C	C	B	A	B	B	B		A	B	A		A	A	A	A	C	A	A	A					A
Soybean Oil	-	B	B	C	C	A	A	A	A	A		A	A	A		A	B	A		D			A					
Starch	$C_{27}H_{48}O_{20}$	B	B	B	B	A	A	A	A	A			B	A		A	C	A		A	A	A	A	A	A		A	A
Steam (212°F)	-	B	B	A	A	A	A	A	A	A			B	A	A	D	B	C	A	D	A		A					
Stearic Acid	$C_{18}H_{36}O_2$	B	C	C	C	B	A	A	A	A		A	B	B		A	B	A	A	A	A	A	A		A			
Styrene	C_8H_8	A	A	B	B	A	A	A	A	A			B	A		D	D	B	A	A	A		A					
Sugar Liquids	-	A	A	B	B	A	A	A	A	A		A	A	A		A	A	A	A	A	A		A	A	A			
Sugar, Syrups & Jam	-	B	B	B	C		A	A	A	A		A	C	A			A		A	A	A	A	A	A	A		A	
Sulfate Black Liquor	H_2O_4S	D	C	C	C	B	A	B	B	B			D	B		C	A	B	A	D	A	A	A	A				
Sulfate Green Liquor	H_2O_4S	D	C	C	C	B	A	B	B	B			D	B		C	A	B	A	D	A	A	A	A				
Sulfate White Liquor	H_2O_4S	D	C	C	C	B	B	B	C	B			D	B		C	A	B	A	D	A	A	A	A	A			
Sulfur	S	C	C	C	C	B	A	A	B	A			D	A		D	C	B	A	B	A	A	A	A	A		A	
Sulfur Chloride	SCl	D	D	D	D	D	D	C	D	B		D	C	D		D	C	A	C	D	A	B	A					A
Sulfur Dioxide (dry)	SO_2	B	B	B	B	A	A	B	B	A		A	B	C		D	B	A	A	B	A	A	A	A	A	A	A	A
Sulfur Dioxide (wet)	SO_2	B	D			B	C	B	A	A		A	D	D		D	B		A	B	A	B	A	A	A	A	A	A
Sulfur Hexafluoride	SF_6	A	B			A		A		C						B	B	B		D	A		A					
Sulfur, Molten	-	A	D	C	B	B	A	A	C	B				A		D	B	B		D			A					
Sulfur Trioxide	SO_3	A	D	B	B	B	B	A	A	A		C	C	A		D	B	B	C	D	A	D	A		D		A	
Sulfur Trioxide (dry)	SO_3	A	C	B	B	B	B	B	B	B		D	B	D		D	B	A	D	D			A		D		A	
Sulfuric Acid 0 to 77%	H_2SO_4	D	D	D	D	C	C	B	C	A		C	D	D		B	C	A	B	D	D	A	A	A	A	B	A	A
Sulfuric Acid 100%	H_2SO_4	D	D	C	C	C	C	B	C	B		D	D	C		D	C	B	D	D	D	A	A	A	A	D	A	A
Sulfurous Acid	H_2O_3S	C	D	D	D	B	B	B	B	B		A	D	B		C	C	A	A	C	B	B	A		A			A
Tall Oil	-	C	B	B	B	A	A	A	A	A			B	A		B	D	A		A			A	A				
Tannic Acid (Tannin)	$C_{27}H_{24}O_{18}$	C	B	C	C	B	B	B	B	B		A	B	B		B	A	A	A	B	A	B	A	A	A	A	A	A
Tanning Liquors	$C_{27}H_{24}O_{18}$	A	A			A	A	A	A	A		A	A	A		B	B	A	A	B			A					
Tar & Tar Oils	$C_2H_4O_3$	B	A	A	A	A	A	A	A	A			A	A		C	D	A		A	A		A	A				
Tartaric Acid	$C_4H_6O_6$	B	D	D	D	A	A	A	A	B		A	B	C		C	B	A	A	B	A	B	A	A	A	A	A	A

Ratings: A - Excellent B - Good C - Poor D - Do not use Blank - No Information

QLD Ph: +617 5593 4292 | salesqld@hoseflex.com **WA** Ph: +618 9468 2840 | saleswa@hoseflex.com **VIC** Ph: +613 8566 7250 | salesvic@hoseflex.com

Media	Chemical Formula	Metals														Elastomers				Polymers								
		Aluminum	Brass	Carbon Steel	Ductile Iron / Cast Iron	316/316Ti/321 S.St	17-4PH	Alloy20	Monel	Hastelloy C®	Inconel 625	Titanium	Bronze	304 Stainless Steel	Duplex	Buna N (Nitrile)	EPDM/EPR	Viton	Flexible Graphite	Delrin®	Peek®	PVDF	Teflon® and Reinforced Teflon	PCTFE	UHMWPE®	Vespel®	PFA	KEL-F®
Tetraethyl Lead	$C_8H_{20}Pb$	B	B	B	C	B	A	A	A				A	A		B	D	A		A	A		A					
Toluol (Toluene)	C_7H_8	A	A	A	A	A	A	A	A	A		A	A	A	A	D	D	B	A	C	A	B	A		B	A		B
Tomato Juice	-	A	C	B	C	A	A	A	A	A			B	A		A	A	A	A	B	A	A	A					A
Transformer Oil	-	A	B	A	B	A	A	A	A	A			A	A		A		A	A	A	A		A		A			
Tributyl Phosphate	$C_{12}H_{27}O_4P$	A	A	A	A	A	A	A	A				B	A	A	D	B	D		A			A		A			
Trichlorethylene	C_2HCl_3	B	A	B	C	B	A	A	A	A		B	B	B		D	D	B	A	C	A	B	A			A	A	A
Trichloroacetic Acid	$C_2HCl_3O_2$	D	B		D	D	C	B	B	A		D	B	D		C	B	C	A	D	A	B	A		A			A
Triethanolamine	$C_6H_{15}NO_3$	B		C	C	B	A	A	A	A			C	A		C	A	D		A	A		A		A			
Triethylamine	$C_6H_{15}NO_3$		B	A		B		B		A			A			B	A	C	A	D		B	A					A
Trisodium Phosphate	Na_3O_4P	D		A	B	A	A	A	A	A			C	B		A	A	B	A	A	A	A	A			D		
Tung Oil	-	B	B	B	B	A	A	A	A	A			B	A		A	D	A		A	A		A					
Turpentine	$C_{10}H_{16}$	A	C	B	B	B	A	A	A	A		B	B	A		B	D	A	A	A	A	A	A		A			A
Urea	CH_4N_2O	B	B	C	C	B	A	A	B	B		A	C	B		C	B	C	A	A	A	A	A		A		A	
Uric Acid	$C_5H_4N_4O_3$	C				A	B	A		B		A	B	B					A	B			A					
Varnish	-	A	B	C	C	A	A	A	A	A			A	A		C	D	B	A	A	A		A					A
Vegetable Oils	-	A	B	A	B	A	A	A	A	A			B	A		A	C	A		A	A		A	A				
Vinegar	$C_2H_4O_2$	D	C	D	D	A	A	A	A	A		A	C	A		C	A	C	A	B	A	B	A	A			A	A
Vinyl Acetate	$C_4H_6O_2$	B	B	A	B	B	A	B	B	A			C	B		D	B	C	A	C	A	B	A					
Water (distilled)	H_2O	A	B	C	D	A	A	A	A	A		A	A	A		A	A	B	A	B	A	A	A	A	A	B	A	A
Water (fresh)	H_2O	A	B	C	C	A	A	A	A	A	A	A	A	A		A	A	B	A	A	A	A	A	A		B	A	A
Water (acid mine)	-	D	D	D	D	B	A	A	B	B		A	C	B	B	A	A	D	A	A		A	A	A				A
Waxes	-	A	A	A	A	A		A	A	A						A	C	A		A	A		A					
Whiskey & Wines	-	C	B	D	D	A	A	A	A	A		A	B	A		A	A	A	A	A	A	A	A					A
Xylene, Xylol (dry)	$C_{24}H_{30}$	A	A	B	B	A	A	A	A	A		A	A	B		D	D	B	A	A	A	A	A		B			A
Zinc Bromide	Br_2Zn	D	B		D	B		B	B	A				D		B	B	B	A	A			A					
Zinc Hydrosulfite	ZnS_2O_4	D	C	A	B	A		A	B	B			D	A		A	A	A		C			A					
Zinc Sulfate	$ZnSO_4$	D	C	C	D	B	A	A	B	B		A	C	B		A	A	A	A	C	A	A	A			A		A
Zinc	Zn	C				A				A				A			A	A					A					

Ratings: A - Excellent B - Good C - Poor D - Do not use Blank - No Information

10.31 Basic Rubber Compounds

ELASTOMER RUBBER COMPOUNDS TYPES AND REFERENCES					
General Description	Chemical Description	Abbreviation (ASTM 1418)	ISO/DIN 1629	Other Trade names & Abbreviations	ASTM D2000 Designations
Nitrile	Acrylonitrile-butadiene rubber	NBR	NBR	Buna-N	BF, BG, BK, CH
Hydrogenated Nitrile	Hydrogenated Acrylonitrile-butadiene rubber	HNBR	(HNBR)	HNBR	DH
Ethylene-Propylene	Ethylene propylene diene rubber	EPDM	EPDM	EP, EPT, EPR	BA, CA, DA
Fluorocarbon (Viton®)	Fluorocarbon Rubber	FKM	FPM	Viton®, Fluorel®	HK
Chloroprene	Chloroprene rubber	CR	CR	Neoprene	BC, BE
Silicone	Silicone rubber	VMQ	VMQ	PVMQ	FC, FE, GE
Fluorosilicone	Fluorosilicone rubber	FVMQ	FVMQ	FVMQ	FK
Polyacrylate	Polyacrylate rubber	ACM	ACM	ACM	EH
Ethylene Acrylic	Ethylene Acrylic rubber	AEM	AEM	Vamac®	EE, EF, EG, EA
Styrene-butadiene	Styrene-butadiene rubber	SBR	SBR	SBR	AA, BA
Polyurethane	Polyester urethane / Polyether urethane	AU / EU	AU / EU	AU / EU	BG
Natural rubber	Natural rubber	NR	NR	NR	AA

Basic Property	NBR	HNBR	EPDM	FKM	CR	ACM	AEM	SBR	AU/EU	VMQ	FVMQ	NR
Economy of Material	A	D	B	C	B	C	D	A	C	C	D	A
Compression Set Resistance	A	A	A	A	B	D	B	B	C	B	B	A
Resilience (Rebound)	B	B	B	B	B	C	B	B	B	B	B	A
Tear Strength	B	A	B	B	B	C	B	C	B	D	C	A
Heat Aging Resistance	C	B	B	A	C	A	A	C	A	A	A	C
Ozone Resistance	D	B	B	A	B	B	A	D	A	A	A	D
Resistance to Oil & Grease	B	B	D	A	B	A	C	D	B	C	A	D
Fuel Resistance	D	C	D	B	D	A	D	D	C	D	B	D
Water Swell Resistance	B	B	A	B	C	D	B	A	D	A	A	A
Gas Impermeability	B	B	C	B	B	C	B	C	B	D	D	C
Abrasion Resistance	B	B	B	C	B	B	B	A	A	D	D	A
High Temperature - Standard	100°c	148°c	148°c	198°c	121°c	148°c	148°c	100°c	80°c	232°c	205°c	105°c
Low Temperature - Standard	-30°c	-30°c	-51°c	-15°c	-40°c	-51°c	-40°c	-45°c	-51°c	-60°c	-60°c	-51°c

Ratings: A - Excellent B - Good C - Poor D - Do not use

10.32 Hose Orientation

ORIENTATION OF FITTINGS

Proper positioning of elbow end fittings on a hose is governed by the offset angle, or the amount of angular offset between connecting parts in the installation. If this angle of orientation is not correct in the construction of a hose assembly the performance and life of the assembly will be greatly reduced.

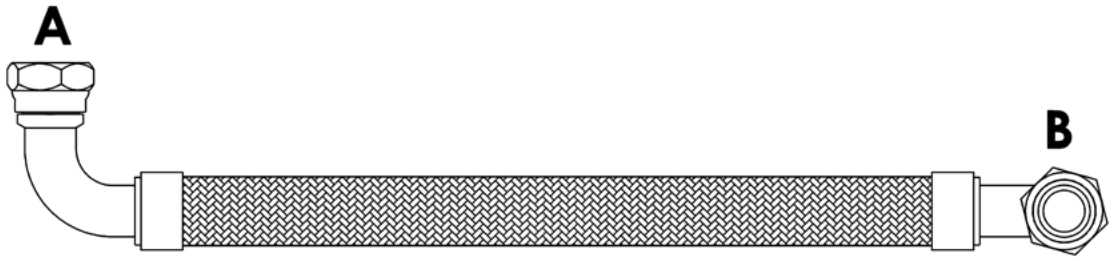

HOW TO MEASURE

Orientation is determined by the number of degrees measured in a clockwise direction. To measure the orientation angle look along the hose with the furthest fitting **(A)** away from the viewer and the nearest fitting **(B)** closest to the viewer.

Fitting **(A)** must be set at 0 Degrees.

If no angle is given elbows are positioned at 0 Degrees.

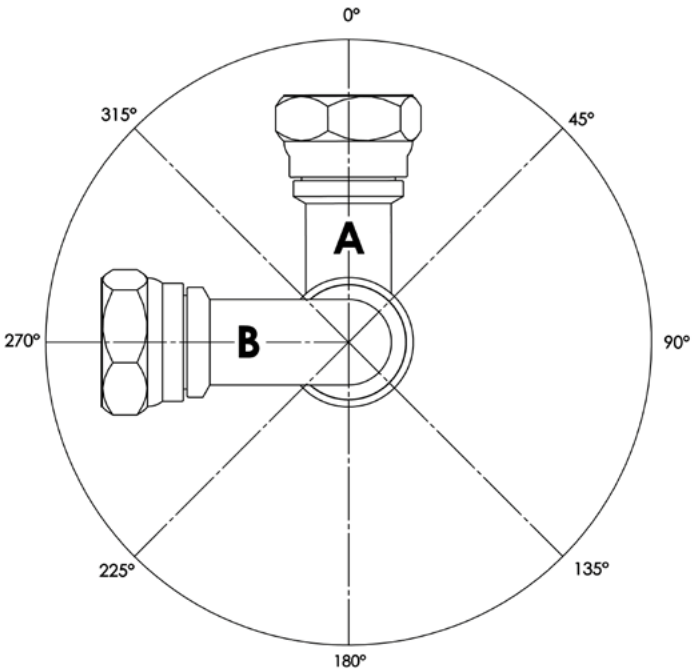

10.33 Pressure Conversions

psi	kPa	Bar	kg/cm²	mm Hg.	cm Hg.	METRES H_20	Millibar (mb)
200	1379	13.8	14	10372.8	1037.6	140.8	13789.4
400	2758	27.6	28	20745.6	2075.2	281.6	27578.8
600	4137	41.4	42	31118.4	3112.8	422.4	41368.2
800	5516	55.2	56	41491.2	4150.4	563.2	55157.6
1000	6895	69	70	51864	5188	704	68947
1200	8274	82.8	84	62236.8	6225.6	844.8	82736.4
1400	9653	96.6	98	72609.6	7263.2	985.6	96525.8
1600	11032	110.4	112	82982.4	8300.8	1126.4	110315.2
1800	12411	124.2	126	93355.2	9338.4	1267.2	124104.6
2000	13790	138	140	103728	10376	1408	137894
2200	15169	151.8	154	114100.8	11413.6	1548.8	151683.4
2400	16548	165.6	168	124473.6	12451.2	1689.6	165472.8
2600	17927	179.4	182	134846.4	13488.8	1830.4	179262.2
2800	19306	193.2	196	145219.2	14526.4	1971.2	193051.6
3000	20685	207	210	155592	15564	2112	206841
3200	22064	220.8	224	165964.8	16601.6	2252.8	220630.4
3400	23443	234.6	238	176337.6	17639.2	2393.6	234419.8
3600	24822	248.4	252	186710.4	18676.8	2534.4	248209.2
3800	26201	262.2	266	197083.2	19714.4	2675.2	261998.6
4000	27580	276	280	207456	20752	2816	275788
4200	28959	289.8	294	217828.8	21789.6	2956.8	289577.4
4400	30338	303.6	308	228201.6	22827.2	3097.6	303366.8
4600	31717	317.4	322	238574.4	23864.8	3238.4	317156.2
4800	33096	331.2	336	248947.2	24902.4	3379.2	330945.6
5000	34475	345	350	259320	25940	3520	344735
5200	35854	358.8	364	269692.8	26977.6	3660.8	358524.4
5400	37233	372.6	378	280065.6	28015.2	3801.6	372313.8
5600	38612	386.4	392	290438.4	29052.8	3942.4	386103.2
5800	39991	400.2	406	300811.2	30090.4	4083.2	399892.6
6000	41370	414	420	311184	31128	4224	413682
6200	42749	427.8	434	321556.8	32165.6	4364.8	427471.4
6400	44128	441.6	448	331929.6	33203.2	4505.6	441260.8
6600	45507	455.4	462	342302.4	34240.8	4646.4	455050.2
6800	46886	469.2	476	352675.2	35278.4	4787.2	468839.6
7000	48265	483	490	363048	36316	4928	482629
7200	49644	496.8	504	373420.8	37353.6	5068.8	496418.4
7400	51023	510.6	518	383793.6	38391.2	5209.6	510207.8
7600	52402	524.4	532	394166.4	39428.8	5350.4	523997.2
7800	53781	538.2	546	404539.2	40466.4	5491.2	537786.6
8000	55160	552	560	414912	41504	5632	551576
8200	56539	565.8	574	425284.8	42541.6	5772.8	565365.4
8400	57918	579.6	588	435657.6	43579.2	5913.6	579154.8
8600	59297	593.4	602	446030.4	44616.8	6054.4	592944.2
8800	60676	607.2	616	456403.2	45654.4	6195.2	606733.6
9000	62055	621	630	466776	46692	6336	620523
9200	63434	634.8	644	477148.8	47729.6	6476.8	634312.4
9400	64813	648.6	658	487521.6	48767.2	6617.6	648101.8
9600	66192	662.4	672	497894.4	49804.8	6758.4	661891.2
9800	67571	676.2	686	508267.2	50842.4	6899.2	675680.6
10000	68950	690	700	518640	51880	7040	689470
10200	70329	703.8	714	529012.8	52917.6	7180.8	703259.4

10.34 Nominal Dimensions of Tube (ASTM A269)

Nominal Tube Size	Outside Diameter	Wall Thickness	Weight
inches	mm	mm	Kg/m
3/16"	4.76	0.50	0.05
		0.70	0.07
		0.90	0.09
1/4"	6.35	0.50	0.07
		0.70	0.10
		0.90	0.12
		1.20	0.15
		1.60	0.19
5/16"	7.94	0.50	0.09
		0.70	0.13
		0.90	0.16
		1.20	0.20
		1.60	0.25
3/8"	9.52	0.50	0.11
		0.70	0.15
		0.90	0.19
		1.20	0.25
		1.60	0.32
1/2"	12.70	0.50	0.15
		0.70	0.21
		0.90	0.26
		1.20	0.34
		1.60	0.44
		2.00	0.53
5/8"	15.88	0.50	0.19
		0.70	0.27
		0.90	0.34
		1.20	0.43
		1.60	0.56
		2.00	0.69
3/4"	19.05	0.50	0.23
		0.70	0.32
		0.90	0.41
		1.20	0.53
		1.90	0.69
		2.00	0.84
		3.25	1.27
7/8"	22.22	0.90	0.48
		1.20	0.62
		1.60	0.81
1"	25.40	0.50	0.31
		0.70	0.43
		0.90	0.55
		1.20	0.72
		1.60	0.94
		2.00	1.15
		2.60	1.49
		3.20	1.78
1 1/8"	28.58	1.20	0.82
		1.60	1.08

Nominal Tube Size	Outside Diameter	Wall Thickness	Weight
inches	mm	mm	Kg/m
1 1/4"	31.75	0.90	0.69
		1.20	0.90
		1.60	1.19
		2.00	1.47
		2.60	1.89
		3.20	2.29
1 3/8"	34.92	0.90	0.77
		1.20	1.01
1 1/2"	38.10	0.90	0.83
		1.20	1.09
		1.60	1.44
		2.00	1.78
		2.60	2.28
		3.20	2.80
1 3/4"	44.45	0.90	0.98
		1.20	1.28
		1.60	1.69
		2.00	2.09
		2.60	2.68
		3.20	3.25
2"	50.80	0.90	1.12
		1.20	1.47
		1.60	1.94
		2.00	2.41
		2.60	3.09
		3.20	3.76
2 1/2"	63.50	1.20	1.84
		1.60	2.44
		2.00	3.03
		2.60	3.90
		3.20	4.76
3"	76.20	1.20	2.22
		1.60	2.94
		2.00	3.66
		2.60	4.72
		3.20	5.76
3 1/2"	88.90	1.60	3.44
		2.00	4.29
		2.60	5.53
		3.20	6.76
4"	101.60	1.60	3.95
		2.00	4.91
		2.60	6.35
		3.20	7.76
5"	127.0	1.60	4.95
		2.00	6.16
		2.60	7.98
		3.20	9.77
6"	152.4	1.60	5.95
		2.00	7.42
		2.60	9.60
		3.20	11.84

10.35 Nominal Dimensions of Pipe (ASTM A312M)

Nominal Pipe Size		Outside Diameter (mm)	Wall Thickness (mm)																
			Stainless Steel				Carbon Steel												
DN	NPS		Sch 5S	Sch 10S	Sch 40S	Sch 80S	Sch 10	Sch 20	Sch 30	Sch 40	STD	Sch 60	Sch 80	XS	Sch 100	Sch 120	Sch 140	Sch 160	XXS
6	1/8″	10.3	-	1.24	1.73	2.41	1.24	-	1.45	1.73	1.73	-	2.41	2.41	-	-	-	-	-
8	1/4″	13.7	-	1.65	2.24	3.02	1.65	-	1.85	2.24	2.24	-	3.02	3.02	-	-	-	-	-
10	3/8″	17.1	-	1.65	2.31	3.20	1.65	-	1.85	2.31	2.31	-	3.20	3.20	-	-	-	-	-
15	1/2″	21.3	1.65	2.11	2.77	3.73	2.11	-	2.41	2.77	2.77	-	3.73	3.73	-	-	-	4.78	7.47
20	3/4″	26.7	1.65	2.11	2.87	3.91	2.11	-	2.41	2.87	2.87	-	3.91	3.91	-	-	-	5.56	7.82
25	1″	33.4	1.65	2.77	3.38	4.55	2.77	-	2.90	3.38	3.38	-	4.55	4.55	-	-	-	6.35	9.09
32	1 1/4″	42.2	1.65	2.77	3.56	4.85	2.77	-	2.97	3.56	3.56	-	4.85	4.85	-	-	-	6.35	9.70
40	1 1/2″	48.3	1.65	2.77	3.68	5.08	2.77	-	3.18	3.68	3.65	-	5.08	5.08	-	-	-	7.14	10.15
50	2″	60.3	1.65	2.77	3.91	5.54	2.77	-	3.18	3.91	3.91	-	5.54	5.54	-	-	-	8.74	11.07
65	2 1/2″	73.0	2.11	3.05	5.16	7.01	3.05	-	4.78	5.16	5.16	-	7.01	7.01	-	-	-	9.53	14.02
80	3″	88.9	2.11	3.05	5.49	7.62	3.05	-	4.78	5.49	5.49	-	7.62	7.62	-	-	-	11.13	15.24
90	3 1/2″	101.6	2.11	3.05	5.74	8.08	3.05	-	4.78	5.74	5.74	-	8.08	8.08	-	-	-	-	-
100	4″	114.3	2.11	3.05	6.02	8.56	3.05	-	4.78	6.02	6.02	-	8.56	8.56	-	11.13	-	13.49	17.12
125	5″	141.3	2.77	3.40	6.55	9.53	3.40	-	-	6.55	6.55	-	9.53	9.53	-	12.70	-	15.88	19.05
150	6″	168.3	2.77	3.40	7.11	10.97	3.40	-	-	7.11	7.11	-	10.97	10.97	-	14.27	-	18.26	21.95
200	8″	219.1	2.77	3.76	8.18	12.70	3.76	6.35	7.04	8.18	8.18	10.31	12.70	12.70	15.09	18.26	20.62	23.01	22.23
250	10″	273.1	3.40	4.19	9.27	12.70	4.19	6.35	7.80	9.27	9.27	12.70	15.09	12.70	18.26	21.44	25.40	28.58	25.40
300	12″	323.9	3.96	4.57	9.53	12.70	4.57	6.35	8.38	10.31	9.53	14.27	17.48	12.70	21.44	25.40	28.58	33.32	25.40
350	14″	355.9	3.96	4.78	9.53	12.70	6.35	7.92	9.53	11.13	9.53	15.09	19.05	12.70	23.83	27.79	31.75	35.71	-
400	16″	406.4	4.19	4.78	9.53	12.70	6.35	7.92	9.53	12.70	9.53	16.66	21.44	12.70	26.19	30.96	36.53	40.49	-
450	18″	457	4.19	4.78	9.53	12.70	6.35	7.92	11.13	14.27	9.53	19.05	23.83	12.70	29.36	34.93	39.67	45.24	-
500	20″	508	4.78	5.54	9.53	12.70	6.35	9.53	12.70	15.09	9.53	20.62	26.19	12.70	32.54	38.10	44.45	50.01	-
550	22″	559	4.78	5.54	-	-	6.35	9.53	12.70	-	9.53	22.23	28.58	12.70	34.93	41.28	47.63	53.98	-
600	24″	610	5.54	6.35	9.53	12.70	6.35	9.53	14.27	17.48	9.53	24.61	30.96	12.70	38.89	46.02	52.37	59.54	-
650	26″	660	-	-	-	-	7.92	12.70	-	-	9.53	-	-	12.70	-	-	-	-	-
700	28″	711	-	-	-	-	7.92	12.70	15.88	-	9.53	-	-	12.70	-	-	-	-	-
750	30″	762	6.35	7.92	-	-	7.92	12.70	15.88	-	9.53	-	-	12.70	-	-	-	-	-

QLD Ph: +617 5593 4292 | salesqld@hoseflex.com **WA** Ph: +618 9468 2840 | saleswa@hoseflex.com **VIC** Ph: +613 8566 7250 | salesvic@hoseflex.com

10.36 Pipe Expansion Table

Cofficient	13	17.3	16	90	52	16.5
Material	Steel	Stainless Steel 304	Stainless Steel 316	ABS Thermoplastic	PVC Thermoplastic	Copper
Temp °C	mm/m	mm/m	mm/m	mm/m	mm/m	mm/m
-140	-2.12	-2.82	-2.61	-14.67	-8.48	-2.69
-120	-1.86	-2.47	-2.29	-12.87	-7.44	-2.36
-100	-1.60	-2.13	-1.97	-11.07	-6.40	-2.03
-80	-1.34	-1.78	-1.65	-9.27	-5.36	-1.70
-60	-1.08	-1.44	-1.33	-7.47	-4.32	-1.37
-50	-0.95	-1.26	-1.17	-6.57	-3.80	-1.20
-40	-0.82	-1.09	-1.01	-5.67	-3.28	-1.04
-30	-0.69	-0.92	-0.85	-4.77	-2.76	-0.87
-20	-0.56	-0.74	-0.69	-3.87	-2.24	-0.71
-15	-0.49	-0.66	-0.61	-3.42	-1.98	-0.63
-10	-0.43	-0.57	-0.53	-2.97	-1.72	-0.54
-5	-0.36	-0.48	-0.45	-2.52	-1.46	-0.46
0	-0.30	-0.40	-0.37	-2.07	-1.20	-0.38
5	-0.23	-0.31	-0.29	-1.62	-0.29	-0.30
10	-0.17	-0.22	-0.21	-1.17	-0.21	-0.21
20	-0.04	-0.05	-0.05	-0.27	-0.05	-0.05
23	0.00	0.00	0.00	0.00	0.00	0.00
30	0.09	0.12	0.11	0.63	0.36	0.12
40	0.22	0.29	0.27	1.53	0.88	0.28
50	0.35	0.47	0.43	2.43	1.40	0.45
60	0.48	0.64	0.59	3.33	1.92	0.61
70	0.61	0.81	0.75	4.23	2.44	0.78
75	0.68	0.90	0.83		2.70	0.86
80	0.74	0.99	0.91		2.96	0.94
90	0.87	1.16	1.07		3.48	1.11
100	1.00	1.33	1.23		4.00	1.27
110	1.13	1.51	1.39		4.52	1.44
120	1.26	1.68	1.55		5.04	1.60
130	1.39	1.85	1.71		5.56	1.77
140	1.52	2.02	1.87			1.93
150	1.65	2.20	2.03			2.10
160	1.78	2.37	2.19			2.26
170	1.91	2.54	2.35			2.43
180	2.04	2.72	2.51			2.59
190	2.17	2.89	2.67			2.76
200	2.30	3.06	2.83			2.92
220	2.56	3.41	3.15			3.25
240	2.82	3.75	3.47			
250	2.95	3.93	3.63			
260	3.08	4.10	3.79			
280	3.34	4.45	4.11			
290	3.47	4.62	4.27			
300	3.60	4.79	4.43			
320	3.86	5.14	4.75			
340	4.12	5.48	5.07			
360	4.38	5.83	5.39			
380	4.64	6.18	5.71			
400	4.90	6.52	6.03			
420	5.16	6.87	6.35			
440	5.42	7.21	6.67			
460	5.68	7.56	6.99			
480	5.94	7.91	7.31			
500	6.20	8.25	7.63			
520	6.46	8.60	7.95			
540	6.72	8.94	8.27			
560	6.98	9.29	8.59			
580	7.24	9.64	8.91			
600	7.50	9.98	9.23			
620	7.76	10.33	9.55			
640	8.02	10.67	9.87			
660	8.28	11.02	10.19			
680	8.54	11.37	10.51			
700	8.80	11.71	10.83			
720	9.06	12.06	11.15			
740	9.32	12.40	11.47			
760	9.58	12.75	11.79			

10.37 Stub End Type B Dimensions (ASTM A403)

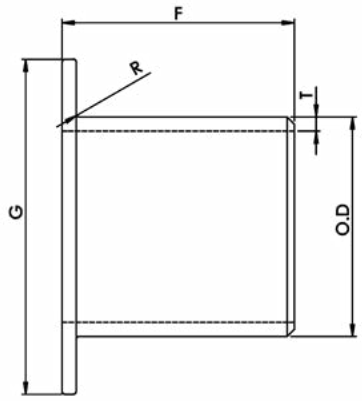

Nominal Pipe Size		Outside Diameter (O.D) (mm)	Wall Thickness (T) (mm)			Dimensions		
DN	NPS		10S	40S	80S	G	F	R
15	1/2″	21.7	2.11	2.77	3.73	35	51	0.8
20	3/4″	27.2	2.11	2.87	3.91	43	51	0.8
25	1″	34.0	2.77	3.38	4.55	51	51	0.8
32	1 1/4″	42.7	2.77	3.56	4.85	64	51	0.8
40	1 1/2″	48.6	2.77	3.68	5.08	73	51	0.8
50	2″	60.5	2.77	3.91	5.54	92	64	0.8
65	2 1/2″	76.3	3.05	5.16	7.01	105	64	0.8
80	3″	89.1	3.05	5.49	7.62	127	64	0.8
90	3 1/2″	101.6	3.05	5.74	8.08	140	76	0.8
100	4″	114.3	3.05	6.02	8.56	157	76	1.6
125	5″	139.8	3.40	6.55	9.53	186	76	1.6
150	6″	165.2	3.40	7.11	10.97	216	89	1.6
200	8″	216.3	3.76	8.18	12.70	270	102	1.6
250	10″	267.4	4.19	9.27	12.70	324	127	1.6
300	12″	318.5	4.57	9.53	12.70	381	152	1.6

10.38 90° & 45° Elbows Dimensions (ASTM A403)

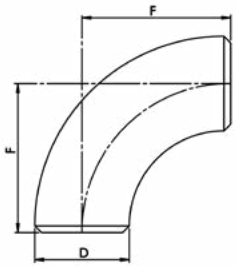

90° ELBOW

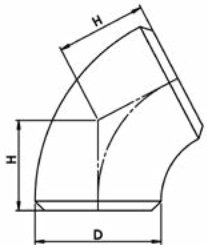

45° ELBOW

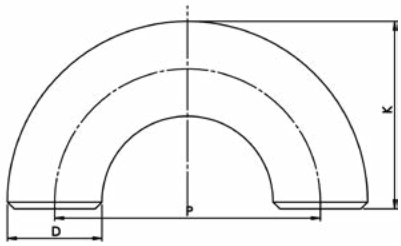

180° ELBOW

Nominal Pipe Size		Outside Diameter (mm)	Center To End			Center To Center		End To End	
			90° Elbow (F)		45° Elbow (H)	180° Elbow (P)		180° Elbow (K)	
DN	NPS		Long	Short	Long	Long	Short	Long	Short
15	1/2″	21.7	38.1	-	15.8	76.2	-	49.0	-
20	3/4″	27.2	38.1	-	15.8	76.2	-	51.7	-
25	1″	34.0	38.1	25.4	15.8	76.2	50.8	55.1	42.4
32	1 1/4″	42.7	47.6	31.8	19.7	95.2	63.6	69.0	53.2
40	1 1/2″	48.6	57.2	38.1	23.7	114.4	76.2	81.5	62.4
50	2″	60.5	76.2	50.8	31.6	152.4	101.6	106.5	81.1
65	2 1/2″	76.3	95.3	63.5	39.5	190.6	127.0	133.5	101.7
80	3″	89.1	114.3	76.2	47.3	228.6	152.4	158.9	120.8
90	3 1/2″	101.6	133.4	88.9	55.3	266.8	177.8	184.2	139.7
100	4″	114.3	152.4	101.6	63.1	304.8	203.2	209.6	158.8
125	5″	139.8	190.5	127.0	78.9	381.0	254.0	260.4	196.9
150	6″	165.2	228.6	152.4	94.7	457.2	304.8	311.2	235.0
200	8″	216.3	304.8	203.2	126.3	609.6	406.4	413.0	311.4
250	10″	267.4	381.0	254.0	157.8	762.0	508.0	514.7	387.7
300	12″	318.5	457.2	304.8	189.4	914.4	609.6	616.5	464.1
350	14″	355.6	533.4	355.6	220.9	1066.8	711.2	711.2	533.4
400	16″	406.4	609.6	406.4	252.5	1219.2	812.8	812.8	609.6
450	18″	457.2	685.8	457.2	284.1	-	-	-	-
500	20″	508.0	762.0	508.0	315.6	-	-	-	-
550	22″	558.8	838.2	558.8	347.2	-	-	-	-
600	24″	609.6	914.4	609.6	378.7	-	-	-	-
650	26″	660.4	990.6	660.4	410.3	-	-	-	-
700	28″	711.2	1066.8	711.2	441.9	-	-	-	-
750	30″	762.0	1143.0	762.0	473.4	-	-	-	-

10.39 Concentric / Eccentric Reducers (ASTM A403)

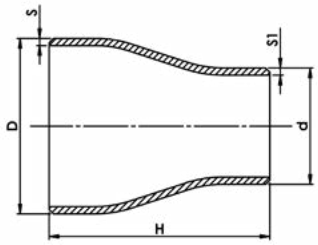

Concentric Reducer

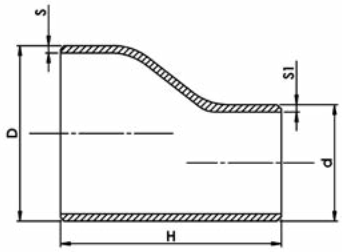

Eccentric Reducer

NPS	D	d	H	Wall Thickness				Weights (kg)	
				SCH STD		SCH XS			
				S	S1	S	S1	SCH STD	SCH XS
3/4" x 1/2"	26.7	21.3	38	2.87	2.77	3.91	3.73	0.10	0.15
1" x 3/4"	33.4	26.7	51	3.38	2.87	4.55	3.91	0.14	0.17
1 x 1/2"		21.3		3.38	2.77	4.55	3.73	0.14	0.16
1 1/4" x 1"	42.2	33.4	51	3.56	3.38	4.85	4.55	0.20	0.24
1 1/4" x 3/4"		26.7		3.56	2.87	4.85	3.91	0.20	0.23
1 1/4" x 1/2"		21.3		3.56	2.77	4.85	3.73	0.19	0.22
1 1/2" x 1 1/4"	48.3	42.2	64	3.68	3.56	5.08	4.85	0.26	0.33
1 1/2" x 1"		33.4		3.68	3.38	5.08	4.55	0.24	0.31
1 1/2" x 3/4"		26.7		3.68	2.87	5.08	3.91	0.22	0.27
1 1/2" x 1/2"		21.3		3.68	2.77	5.08	3.73	0.20	0.26
2" x 1 1/2"	60.3	48.3	76	3.91	3.68	5.54	5.08	0.41	0.54
2" x 1 1/4"		42.4		3.91	3.56	5.54	4.85	0.39	0.53
2" x 1"		33.4		3.91	3.38	5.54	4.55	0.37	0.48
2" x 3/4"		26.7		3.91	2.87	5.54	3.91	0.33	0.46
2" x 1/2"		21.3		3.91	2.77	5.54	3.73	0.31	0.42
2 1/2" x 2"	73	60.3	89	5.16	3.91	7.01	5.54	0.73	0.94
2 1/2" x 1 1/2"		48.3		5.16	3.68	7.01	5.08	0.68	0.86
2 1/2" x 1 1/4"		42.2		5.16	3.56	7.01	4.85	0.67	0.79
2 1/2" x 1"		33.4		5.16	3.38	7.01	4.55	0.59	0.79
3" x 2 1/2"	88.9	73	89	5.49	5.16	7.62	7.01	0.98	1.29
3" x 2"		60.3		5.49	3.91	7.62	5.54	0.91	1.18
3" x 1 1/2"		48.3		5.49	3.68	7.62	5.08	0.86	1.04
3" x 1 1/4"		42.2		5.49	3.56	7.62	4.85	0.77	1.04
3" x 1"		33.4		5.49	3.38	7.62	4.55	0.73	1.04
3 1/2" x 3"	101.6	88.9	102	5.74	5.49	8.08	7.62	1.38	1.85
3 1/2" 2 1/2"		73		5.74	5.16	8.08	7.01	1.34	1.75
3 1/2" x 2"		60.3		5.74	3.91	8.08	5.54	1.23	1.61
3 1/2" x 1 1/2"		48.3		5.74	3.68	8.08	5.08	1.14	1.43
3 1/2" x 1 1/4"		42.2		5.74	3.56	8.08	4.85	1.14	1.43
4" x 3 1/2"	114.3	101.6	102	6.02	5.74	8.56	8.08	1.64	2.21
4" x 3"		88.9		6.02	5.49	8.56	7.62	1.59	2.13
4" x 2 1/2"		73		6.02	5.16	8.56	7.01	1.52	2.01
4" x 2"		60.3		6.02	3.91	8.56	5.54	1.44	1.78
4" x 1 1/2"		48.3		6.02	3.68	8.56	5.08	1.24	1.73
4" x 1 1/4"		42.2		6.02	3.56	8.56	4.85	1.20	1.71
4" x 1"		33.4		6.02	3.38	8.56	4.55	1.12	1.70
5" x 4"	141.3	114.3	127	6.55	6.02	9.52	8.56	2.72	3.78
5" x 3 1/2"		101.6		6.55	5.74	9.52	8.08	2.65	3.65

10.40 Rolled Groove Couplings Dimensions - Fig 10

Specifications

Grooved piping system is reliable and faster to install than welding, threading or flanging. This results in the lowest possible installed cost. It can be adapted to suit standard pipe with cut grooves or standard and light wall pipe with rolled grooves.

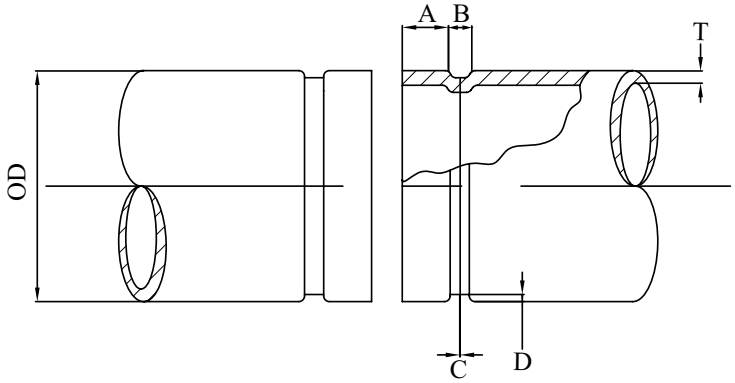

Standard Roll Groove Specifications												
Nominal Pipe Size	Pipe Outside Diameter (mm) 'OD'			Gasket seat ±0.30 ±.770 (mm) 'A'	Groove width ± 0.30 ±.770 (mm) 'B'	Groove Diameter 'C'		Groove Depth	STD C/S Min allow wall thickness (mm) 'T'	Sch 10s S/S Min allow wall thickness (mm) 'T'	Sch 40s S/S Min allow wall thickness (mm) 'T'	Max Flare Diameter (mm)
	Actual	Tolerance (+)	Tolerance (-)			mm	mm					
1"	33.70	+0.381	-0.381	15.875	7.137	30.226	-0.381	1.600	3.38	2.77	3.38	34.5
1 1/4"	42.40	+0.381	-0.381	15.875	7.137	38.989	-0.381	1.600	3.56	2.77	3.56	43.3
1 1/2"	48.30	+0.381	-0.381	15.875	7.137	45.085	-0.381	1.600	3.65	2.77	3.68	49.4
2"	60.30	+0.610	-0.610	15.875	8.738	57.150	-0.381	1.600	3.91	2.77	3.91	62.2
*2 1/2"	73.00	+0.737	-0.737	15.875	8.738	69.088	-0.457	1.981	5.16	3.05	5.16	75.2
2 1/2"	76.10	+0.737	-0.737	15.875	8.738	69.088	-0.457	1.981	5.16	3.05	5.16	75.2
3"	88.90	+0.889	-0.737	15.875	8.738	84.938	-0.457	1.981	5.49	3.05	5.49	90.3
4"	114.30	+1.143	-0.737	15.875	8.738	110.084	-0.508	2.108	6.02	3.05	6.02	116.2
5"	141.30	+1.422	-0.737	15.875	8.738	137.033	-0.559	2.134	6.55	3.40	6.55	143.5
6"	165.10	+1.600	-0.737	15.875	8.738	163.957	-0.559	2.159	7.11	3.40	7.11	170.7
*6"	168.30	+1.600	-0.737	15.875	8.738	163.957	-0.559	2.159	7.11	3.40	7.11	170.7
8"	219.10	+1.600	-0.737	19.050	11.913	214.401	-0.635	2.337	8.18	3.76	8.18	221.5
10"	273.00	+1.600	-0.737	19.050	11.913	268.28	-0.687	2.387	9.27	4.19	9.27	277.4
12"	323.90	+1.600	-0.737	19.050	11.913	318.29	-0.758	2.697	10.31	4.57	9.53	328.2

* USA pipe size

Specifications		
PRODUCT	WORKING PRESSURE	MAX WORKING TEMP
RIGID COUPLING	300 PSI / 2068 kPa	100°c
90° ELBOW		
45° ELBOW		
EQUAL TEE		
REDUCING TEE		
CONCENTRIC REDUCER		
CAP		
MECHANICAL TEE	1600 kPa	

*Refer to Section for part numbers - Page 229 - 230

10.41 Triclover Ferrule Dimensions

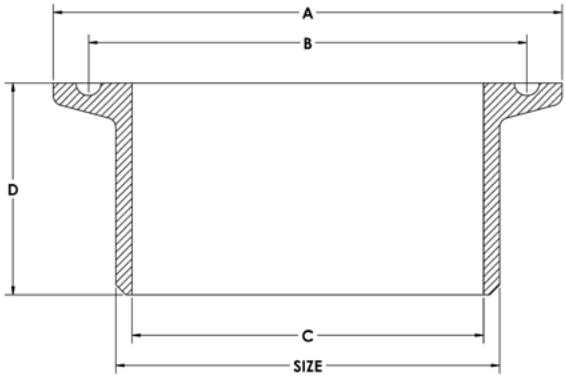

Size		A	B	C	D
DN	(mm)				
1/2"	12.7	25.1	20.0	9.5	21
3/4"	19.1	25.1	20.0	15.9	21
1"	25.4	50.5	43.5	22.2	21
1 1/4"	31.8	50.5	43.5	28.6	21
1 1/2"	38.1	50.5	43.5	34.9	21
2"	50.8	64.0	56.5	47.6	21
2 1/2"	63.5	77.5	70.5	60.3	21
3"	76.2	91.0	83.5	73	21
4"	101.6	119.0	110.0	98.4	21
6"	152.4	166.1	157.0	148.4	27
8"	203.2	217.5	207.2	199.2	29
10"	254	268.5	-	250	29
12"	304.8	319.5	308.8	300.8	29

*Refer to Fittings, Section for part numbers - Page 247

10.43 Bolt Hole Sequence

To obtain a leak-free flange connection, a proper gasket installation is needed, the bolts must be assign on the correct bolt tension, and the total bolt strength must be evenly divided over the whole flange face.

With Torque Tightening (the application of preload to a fastener by the turning of the fastener's nut) the correct bolt tension can be realized.

Correct tightening of a bolt means making the best use of the bolt's elastic properties. To work well, a bolt must behave just like a spring. In operation, the tightening process exerts an axial pre-load tension on the bolt. This tension load is of course equal and opposite to the compression force applied on the assembled components. It can be referred to as the "tightening load" or "tension load".

4 and 8 Bolt Flanges

First round - 30% of final torque (flange sequential order)
Second round- 60% of final torque (flange sequential order)
Third round - 100% of final torque (flange sequential order)
One final time - clockwise or counter clockwise sequentially around the flange

12 Bolt Flanges and More

First round - 20% of final torque (flange sequential order)
Second round - 40% of final torque (flange sequential order)
Third round - 80% of final torque (flange sequential order)
Fourth round - 100% of final torque (sequential order)
One final time - clockwise or counter clockwise sequentially around the flange

The selection of the proper flange bolt tigtening technique requires experience. The successful application of any technique also requires qualification of both the tools that will be used and the crew who will do the work. The following summarizes the most commonly used flange bolt tightening techniques.

- Manual Wrench
- Impact Wrench
- Hammer Wrench
- Hydraulic Torque Wrench
- Manual Beam and Gear-Assisted Torque Wrench
- Hydraulic Bolt Tensioner

Tightening Sequence

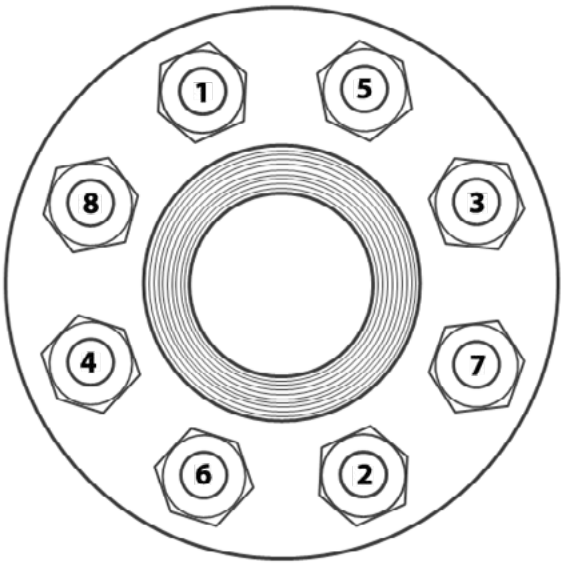

WELD SYMBOLS

COMMONLY USED IN AUSTRALIA

BASIC GAS AND ARC WELDING SYMBOLS	
	FILLET
	BEAD
	GENERAL BUTT
	SQUARE BUTT
	SINGLE BEVEL BUTT
	SINGLE VEE BUTT
	SINGLE 'U' BUTT
	SINGLE 'J' BUTT
	PLUG OR SLOT
	STUD
	SURFACING

RESIISTANCE WELDING SYMBOLS	
	SPOT
	SEAM
	MASH SEAM
	STICH
	MASH STICH
	PROJECTION
	FLASH BUTT
	RESISTANCE BUTT

SUPPLEMENTARY WELDING SYMBOLS	
	WELD ALL ROUND
	FLUSH CONTOUR
	WELD ON SITE
	BACKING STRIP OR BAR
	FLUSH SURFACE FINISH
	CONVEX SURFACE FINISH
	CONCAVE SURFACE FINISH
	BACKING WELD RUN
TYP	TAIL, FOR NOTES

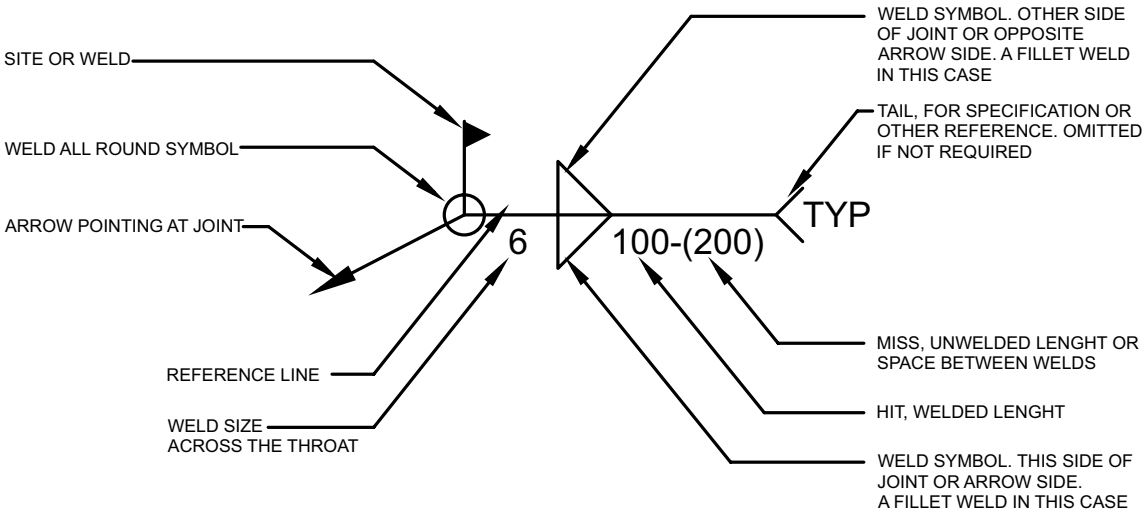

10.45 Thread Specification - BSPT & BSPP (BS21)

BSPT male threads seal against threads of fixed BSPT female. Contact is made on the flanks of the threads.
Use of a thread sealant is recommended for BSPT male to BSPT female connections.
Measure the BSPT male thread OD and female thread ID at the first full thread near the end of the fitting.

BSPT male and BSPP male with conical 30° seat (60° included angle) seal against matching conical 30° seat of BSPP female swivel.

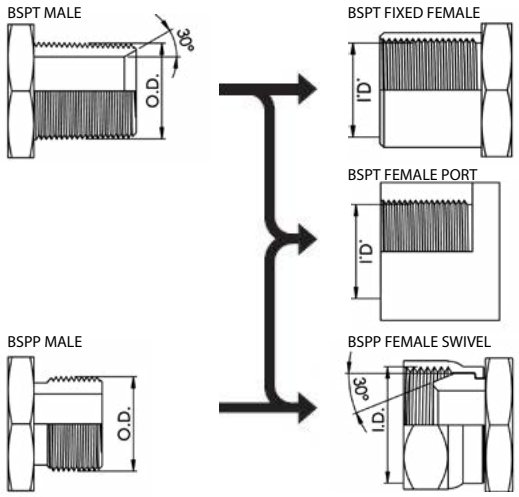

BSPP O Ring male connector has straight threads and O Ring with metal Retaining Ring. It seals against flat external surface of BSPP female port.
BSPP male, with chamfer to locate Bonded Seal also seals against flat external surface of BSPP female port. Surface irregularities require a Spot Face to ensure effective sealing. Elbows and tees have Lock Nut to allow orientation of fitting to required direction.

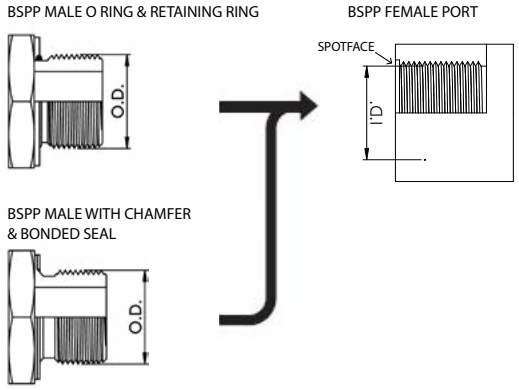

BSPP male and BSPP female flat face swivel require a suitable soft washer between faces to seal. For low working pressure.

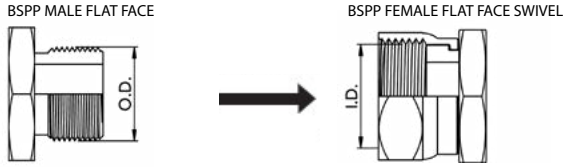

BSPT & BSPP SIZE & PITCH	DASH SIZE	BSPT MALE THREAD O.D.		BSPP MALE THREAD O.D.		BSPT FEMALE THREAD I.D.		BSPP FEMALE THREAD I.D.	
inch - TPI		mm	inch	mm	inch	mm	inch	mm	inch
1/8 - 28	-02	9.5	0.37	9.6	0.38	8.4	0.33	8.6	0.34
1/4 - 19	-04	12.8	0.50	13.0	0.51	11.2	0.44	11.9	0.47
3/8 - 19	-06	16.3	0.64	16.5	0.65	14,7	0.59	15.2	0.60
1/2 - 14	-08	20.4	0.80	20.8	0.82	18,3	0.72	19.1	0.75
5/8 - 14	-10	22.5	0.89	22.8	0.90	20,6	0.81	20.8	0.82
3/4 - 14	-12	25.9	1.02	26.3	1.04	23,9	0.94	24.6	0.97
1 - 11	-16	32.6	1.28	33.1	1.30	29,7	1.17	30.7	1.21
1 1/4 - 11	-20	41.1	1.62	41.8	1.64	38,6	1.52	39.4	1.55
1 1/2 - 11	-24	47.0	1.85	47.7	1.88	44,5	1.75	45.5	1.79
2 -11	-32	58.6	2.31	59.5	2.34	56,4	2.22	57.4	2.26
2 1/2 - 11	-40	74.1	2.92	75.1	2.95	71,9	2.83	72.6	2.86
3 - 11	-48	86.6	3.41	87.9	3.46	84,6	3.33	85.4	3.36

10.46 Thread Specification - NPT & NPSM (ANSI B1.20.1)

National Pipe threads are similar in function to BSP threads, but are not generally interchangeable. NPTF threads (also known as Dryseal) are an mprovement to NPT.

Controlled truncation of threads mean the metal-to-metal thread seal is at root and crest of threads, in addition to flanks of threads.

Use of thread sealant is recommended for NPT male and NPT female connection.

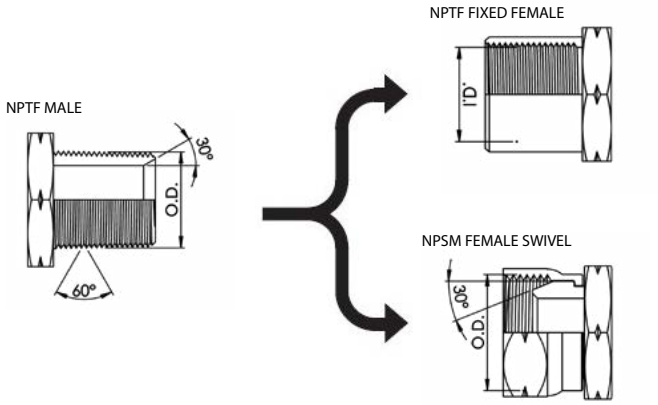

Measure NPT male thread OD and NPT female thread ID at first full thread near end of fitting.

NPT Threads Dimensions

NPT THREAD SIZE & PITCH	DASH SIZE	MALE THREAD MINOR O.D.		FEMALE THREAD I.D.	
inch - TPI		mm	inch	mm	inch
1/8 - 27	-02	9.9	0.39	8.4	0.33
1/4 - 18	-04	13.2	0.52	11.2	0.44
3/8 - 18	-06	16.6	0.65	14.7	0.58
1/2 - 14	-08	20.6	0.81	17.8	0.70
3/4 - 14	-12	26.0	1.02	23.4	0.92
1 - 11 1/2	-16	32.5	1.28	29.5	1.16
1 1/4 - 11 1/2	-20	41.2	1.62	38.1	1.50
1 1/2 - 11 1/2	-24	47.3	1.86	43.9	1.73
2 - 11 1/2	-32	59.3	2.33	56.4	2.22
2 1/2 - 8	-40	71.5	2.82	69.1	2.72
3 - 8	-48	87.3	3.44	84.8	3.34

NPSM Threads Dimensions

NPT THREAD SIZE & PITCH	DASH SIZE	FEMALE THREAD I.D.	
inch - TPI		mm	inch
1/8 - 27	-02	8.6	0.34
1/4 - 18	-04	11.9	0.47
3/8 - 18	-06	15.0	0.59
1/2 - 14	-08	19.1	0.75
3/4 - 14	-12	24.6	0.97
1 - 11 1/2	-16	30.5	1.20
1 1/4 - 11 1/2	-20	39.4	1.55
1 1/2 - 11 1/2	-24	45.5	1.79
2 - 11 1/2	-32	57.4	2.26
2 1/2 - 8	-40	68.8	2.71
3 - 8	-48	84.6	3.33

QLD Ph: +617 5593 4292 | salesqld@hoseflex.com **WA** Ph: +618 9468 2840 | saleswa@hoseflex.com **VIC** Ph: +613 8566 7250 | salesvic@hoseflex.com

10.47 Thread Specification - JIS (JIS B0203)

1. JIS Tapered Pipe Thread

The Japanese tapered pipe thread connector is identical to and interchangeable with the BSPT (tapered) connector. The Japanese male thread does not have a 30° Flare, and will not mate with the BSPP female swivel with conical seat.
The seal on the Japanese tapered pipe thread connector is made on the threads. Use of a thread sealant is recommended.

Thread form per JIS B 0203 (identical to BSPT, Refer to BSPT section for dimensions of threads.)

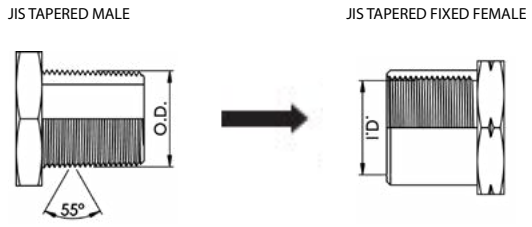

2. JIS 30° Flare (Female Internal Cone Seat)

This connection uses a 60° concave (inverted) seat and British Standard Pipe Parallel threads. They are not interchangeable with BSPP conical seat couplings, because the cone seats are opposite.

Thread form per JIS B 0203 (identical to BSPT, Refer to BSPT section for dimensions of threads.)

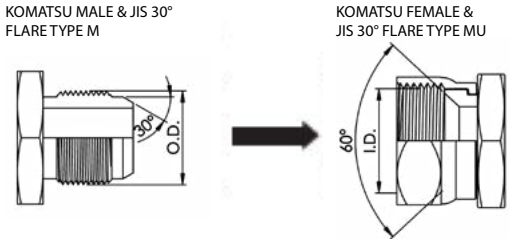

3. Komatsu 30° flare (Female Internal Cone Seat)

Threads commonly used on Komatsu equipment (30° cone) have metric thread form.

MALE THREAD O.D. & PITCH	DASH SIZE	FEMALE THREAD I.D.
M14 x 1.5	-1415	12.5
M18 x 1.5	-1815	16.5
M22 x 1.5	-2215	20.5
M24 x 1.5	-2415	22.5
M30 x 1.5	-3015	28.5
M33 x 1.5	-3315	31.5
M36 x 1.5	-3615	34.5
M33 x 1.5	-3315	31.5

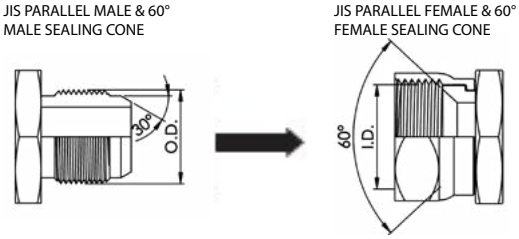

4. Komatsu Style Flange Fitting JIS B 8363

The Komatsu style Flange fitting is nearly identical to, and fully interchangeable with, the SAE Code 61 flange fitting*. The O Ring dimensions are different between all sizes. When replacing a Komatsu style flange with an SAE style flange, an SAE style O Ring must always be used. *5/8" is not in the SAE Standards.

10.48 Thread Specification - JIC 37° FLARE & UNO (SAE J514)

JIC male has 37° flare which seals against 37° seat in female. JIC male can also seal against 37° flared tubing with JIC nut and sleeve.

JIC male can also be used with RYCO S134 J-Lok Female Nut and Flareless Olive on Imperial OD tubing.

UNO (O Ring Boss) seals with ORing compressed between hex boss of UN male and 12°/15° tapered bore of UN (O Ring Boss) female port. For elbows and tees, Backup Washer and Lock Nut allow orientation of fitting to required direction.

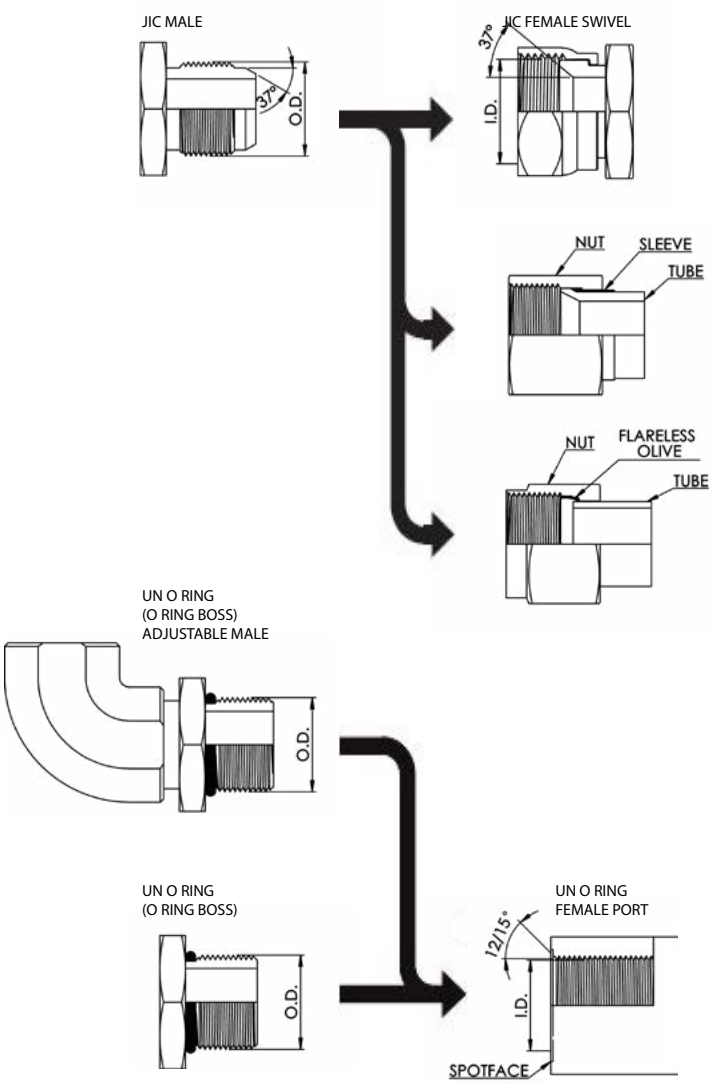

MALE THREAD O.D. & PITCH	DASH SIZE	MALE THREAD O.D.		FEMALE THREAD O.D.		TUBE SIZE
inch - TPI		mm	inch	mm	inch	inch
5/16 - 24 UNF	-05	7.9	0.31	6.9	0.27	1/8
3/8 - 24 UNF	-06	9.5	0.38	8.5	0.33	3/16
7/16 - 20 UNF	-07	11.1	0.44	9.9	0.39	1/4
1/2 - 20 UNF	-08	12.7	0.50	11.4	0.45	5/16
9/16 - 18 UNF	-09	14.3	0.56	13.0	0.51	3/8
3/4 - 16 UNF	-12	19.1	0.75	17.5	0.69	1/2
7/8 - 14 UNF	-14	22.2	0.88	20.3	0.80	5/8
1 1/16 - 12 UN	-17	27.0	1.06	24.9	0.98	3/4
1 3/16 - 12 UN	-19	30.2	1.19	28.2	1.11	7/8
1 5/16 - 12 UN	-21	33.3	1.31	31.2	1.23	1
1 5/8 - 12 UN	-26	41.3	1.63	39.1	1.54	1 1/4
1 7/8 - 12 UN	-30	47.6	1.88	45.5	1.79	1 1/2
2 1/2 - 12 UN	-40	63.5	2.50	61.5	2.42	2

10.49 Thread Specification - Metric DIN (DIN 3852-1)

The same male used with a metal Bonded Seal will mate with a DIN 3852-1 metric threaded port with spotface.
The DIN male 24° internal cone seat will seal with flareless female swivel fittings. These female fittings use either a spherical nose (DKL/DKS) or an O Ring seal (DKOL/DKOS) located on their outward facing 24° cone. Female DKL sizes up to and including M26 have a universal 24°/60° cone and can be used in place of female DKM fittings with 60° cone.

BSPP O Ring male connector has straight threads and O Ring with metal Retaining Ring. It seals against flat external surface of BSPP female port.
BSPP male, with chamfer to locate Bonded Seal also seals against flat external surface of BSPP female port.
Surface irregularities require a Spot Face to ensure effective sealing. Elbows and tees have Lock Nut to allow orientation of fitting to required direction.

The same male also mates with the DIN system Metric Tube, Tube Nut and Compression Olive (Cutting Ring). Tightening of the female nut compresses the olive causing it to cut into the tube, thereby forming a seal between the tube, olive and 24° male cone.

The same male used with a metal Bonded Seal will mate with a DIN 3852-1 metric threaded port with spotface.

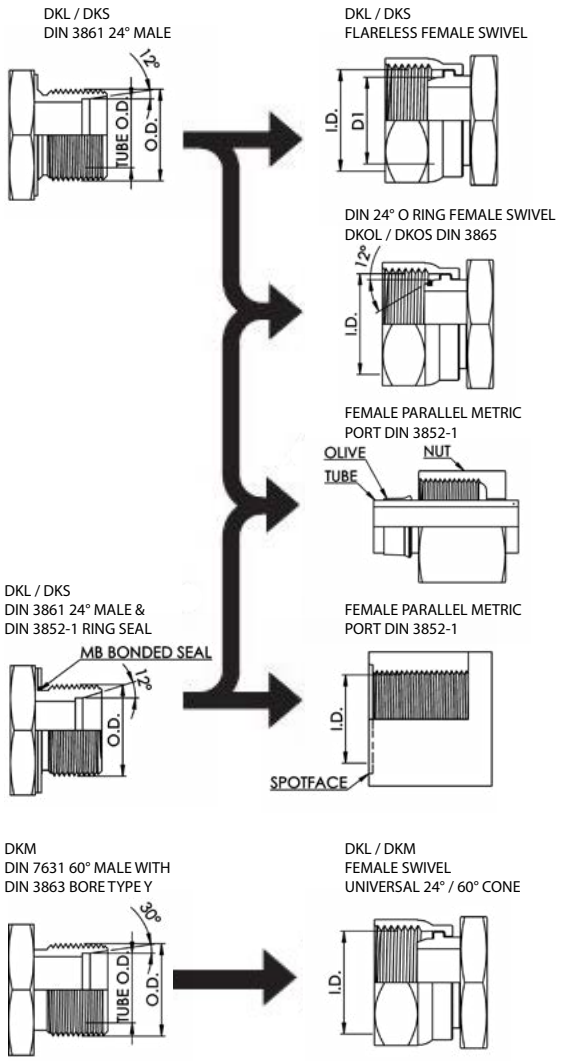

DKM 60° CONE SEAT

The DIN male 60° internal cone seat will mate with DKL/DKM female universal 24°/60° cone fittings up to and including size M26 and DKM female 60° cone fittings from size M30 up.

		* LIGHT SERIES - DKL/DKOL				HEAVY SERIES - DKS/DKOS			
MALE THREAD O.D. & PITCH	FEMALE THREAD I.D.	DASH SIZE	TUBE O.D.	D1 DIA	D2 DIA	DASH SIZE	TUBE O.D.	D1 DIA	D2 DIA
mm	mm		mm	mm	mm		mm	mm	mm
M12 x 1.5	10.5	-1215*	6	7.5	6.3	-	-	-	-
M14 x 1.5	12.5	-1415*	8	9.5	8.2	-1415	6	7.5	6.3
M16 x 1.5	14.5	-1615*	10	11.5	10.2	-1615	8	9.5	7.9
M18 x 1.5	16.5	-1815*	12	14.0	12.2	-1815	10	12.0	10.0
M20 x 1.5	18.5	-	-	-	-	-2015	12	14.0	12.0
M22 x 1.5	20.5	-2215*	15	17.0	15.2	-2215	14	16.0	14.2
M24 x 1.5	22.5	-	-	-	-	-2415	16	18.0	15.8
M26 x 1.5	24.5	-2615*	18	20.0	18.2	-	-	-	-
M30 x 2.0	28.0	-3020	22	24.5	22.2	-3020	20	22.5	19.8
M36 x 2.0	34.0	-3620	28	30.5	28.2	-3620	25	27.5	24.5
M42 x 2.0	40.0	-	-	-	-	-4220	30	33.0	30.0
M45 x 2.0	43.0	-4520	35	38.0	35.4	-	-	-	-
M52 x 2.0	50.0	-5220	42	45.0	42.4	-5220	38	41.0	36.8

10.50 Thread Specification - SAE (SAE J512)

SAE 45° FLARE- SAE J512

SAE male has 45° flare which seals against 45° seats in females. Males can also seal against 45° flared tubing with nut and sleeve.
7/16 - 20, 1/2 - 20, 3/4 - 16 & 7/8 - 14 are the same thread form as JIC 37° flare. Some fittings in these sizes have both JIC 37° & SAE 45° seats.

MALE THREAD O.D. & PITCH	DASH SIZE	MALE THREAD O.D.		FEMALE THREAD I.D.		TUBE SIZE
inch - TPI		mm	inch	mm	inch	inch
5/16 - 24	-05	7.9	0.31	6.8	0.27	1/8
3/8 - 24	-06	9.5	0.38	8.4	0.33	3/16
7/16 - 20	-07	11.1	0.44	9.9	0.39	1/4
1/2 - 20	-08	12.7	0.50	11.4	0.44	5/16
5/8 - 18	-10	15.9	0.63	14.2	0.56	3/8
3/4 - 16	-12	19.1	0.75	17.5	0.69	1/2
7/8 - 14	-14	22.2	0.88	20.6	0.81	5/8
1 1/16 - 14	-17	27.0	1.06	24.9	0.98	3/4

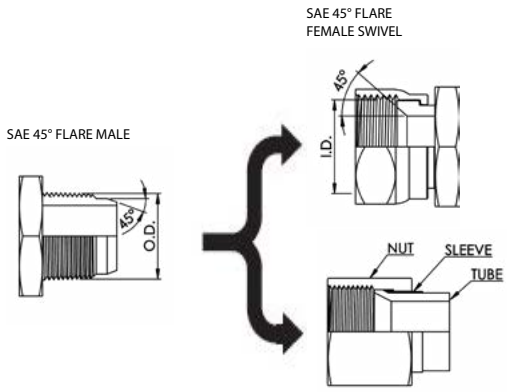

SAE 45° INVERTED FLARE - SAE J512

MALE THREAD O.D. & PITCH	DASH SIZE	MALE THREAD O.D.		FEMALE THREAD I.D.		TUBE SIZE
inch - TPI		mm	inch	mm	inch	inch
7/16 - 24	-07	11.1	0.44	9.9	0.39	1/4
1/2 - 20	-08	12.7	0.50	11.4	0.45	5/16
5/8 - 18	-10	15.9	0.63	14.2	0.56	3/8
11/16 - 18	-11	17.5	0.69	16.0	0.63	7/16

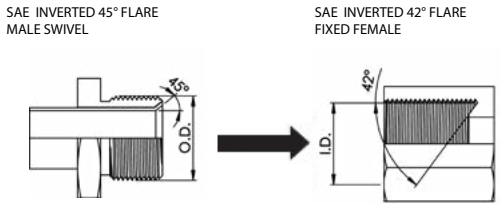

SAE PILOT O RING SEALS

Pilot Male Swivel

MALE THREAD O.D. & PITCH	DASH SIZE	MALE THREAD O.D.		FEMALE THREAD I.D.		TUBE SIZE
inch - TPI		mm	inch	mm	inch	inch
5/8 - 18	-10	15.9	0.63	14.2	0.56	-6
3/4 - 18	-12	19.0	0.75	17.8	0.70	-8
7/8 - 18	-14	22.2	0.88	20.6	0.81	-10

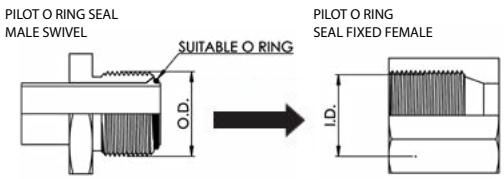

Pilot Female Swivel

MALE THREAD O.D. & PITCH	DASH SIZE	MALE THREAD O.D.		FEMALE THREAD I.D.		TUBE SIZE
inch - TPI		mm	inch	mm	inch	inch
5/8 - 18	-10	15.9	0.63	14.2	0.56	-6
3/4 - 16	-12	19.0	0.75	17.5	0.69	-8
3/4 - 16	-12	19.0	0.75	17.5	0.69	-8

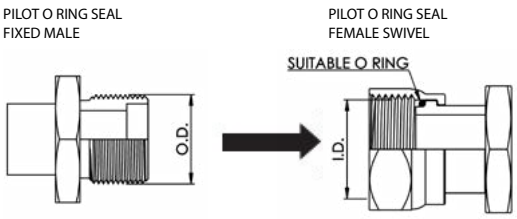

10.51 Thread Specification - Metric French GAZ

Also known as Metric French GAZ 24°
These seal on a 24° cone seat located internally on the male connector using straight fine metric threads.

Metric French GAZ series uses fractional number metric OD tubing, as shown in the table.

Metric French Millimetric series uses whole number metric OD tubing. The two series are not interconnectable.

The male will mate with a straight thread female swivel with spherical nose seat.

The same male also mates with flareless tube, Tube Nut and Compression Olive (Cutting Ring). Tightening of the female nut compresses the olive causing it to cut into the tube, thereby forming a seal between the tube, olive and 24° male cone.

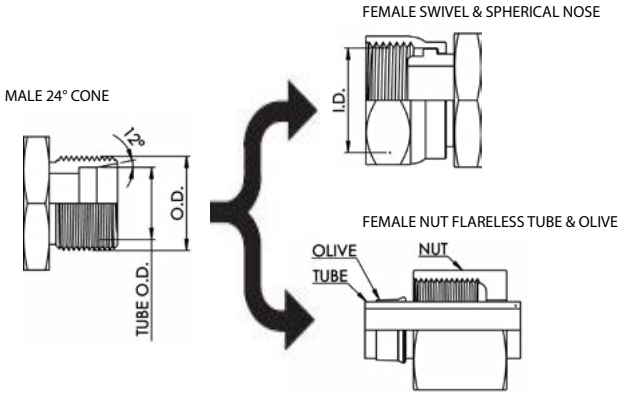

MALE THREAD O.D. & PITCH	DASH SIZE	MALE THREAD O.D.		FEMALE THREAD I.D.		TUBE SIZE
inch - TPI		mm	inch	mm	inch	mm
M20 x 1.5	-20	20.0	0.78	18.5	0.72	13.25
M24 x 1.5	-24	24.0	0.94	22.5	0.88	16.75
M30 x 1.5	-30	30.0	1.18	28.5	1.12	21.25
M36 x 1.5	-36	36.0	1.41	34.5	1.35	26.75
M45 x 1.5	-45	45.0	1.77	43.5	1.71	33.50
M52 x 1.5	-52	52.0	2.04	50.5	1.98	42.25

10.52 Thread Specification - Metric French Millimetric

Also known as Metric Millimetric
These seal on a 24° cone seat located internally on the male connector using straight fine metric threads.

Metric French GAZ series uses fractional number metric OD tubing, as shown in the table.

Metric French Millimetric series uses whole number metric OD tubing. The two series are not interconnectable.

The male will mate with a straight thread female swivel with spherical nose seat.

The same male also mates with flareless tube, Tube Nut and Compression Olive (Cutting Ring). Tightening of the female nut compresses the olive causing it cut into the tube, thereby forming a seal between the tube, olive and 24° male cone.

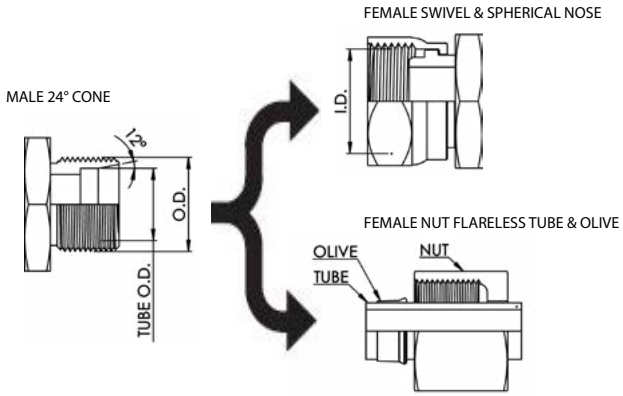

MALE THREAD O.D. & PITCH	DASH SIZE	MALE THREAD O.D.		FEMALE THREAD I.D.		TUBE SIZE
inch - TPI		mm	inch	mm	inch	mm
M27 x 1.5	-27	27.0	1.06	25.5	1.00	20
M30 x 1.5	-30	30.0	1.18	28.5	1.12	22
M33 x 1.5	-33	33.0	1.30	31.5	1.24	25
M36 x 1.5	-36	36.0	1.41	34.5	1.35	28
M39 x 1.5	-39	39.0	1.54	37.5	1.48	30
M45 x 1.5	-45	45.0	1.77	43.5	1.71	35

10.53 Thread Specification - ORFS (SAE J1453)

SAE J1453, ISO 8434-3
ORFS is O RING FACE SEAL

ORFS system consists of ORFS Male with O Ring in Face, which seals against Flat Seated ORFS Female Swivel Nut fitting.

The Swivel Nut can be slipped back to help installation in tight situations.

The prominent position of the O Ring on the Male fitting makes it easy to inspect the condition of the O Ring.

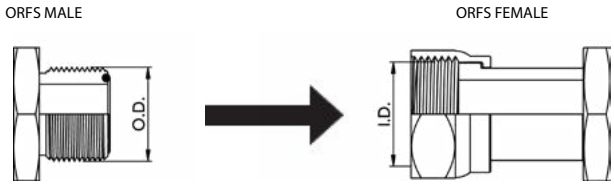

MALE THREAD O.D. & PITCH	DASH SIZE	MALE THREAD O.D.		FEMALE THREAD I.D.		TUBE SIZE
inch - TPI		mm	inch	mm	inch	mm
9/16 - 18 UNF	-09	14.3	0.56	12.9	0.51	1/4
11/16 - 16 UN	-11	17.3	0.68	16.0	0.63	3/8
13/16 - 16 UN	-13	20.6	0.81	19.1	0.75	1/2
1 - 14 UNS	-16	25.4	1.00	23.6	0.73	5/8
1.3/16 - 12 UN	-19	30.0	1.18	28.2	1.11	3/4
1.7/16 - 12 UN	-23	36.3	1.43	34.3	1.35	1
1.11/16 - 12 UN	-27	42.7	1.68	40.6	1.60	1.1/4
2 - 12 UN	-32	51.8	2.00	48.8	1.92	1.1/2

10.54 Nomograph

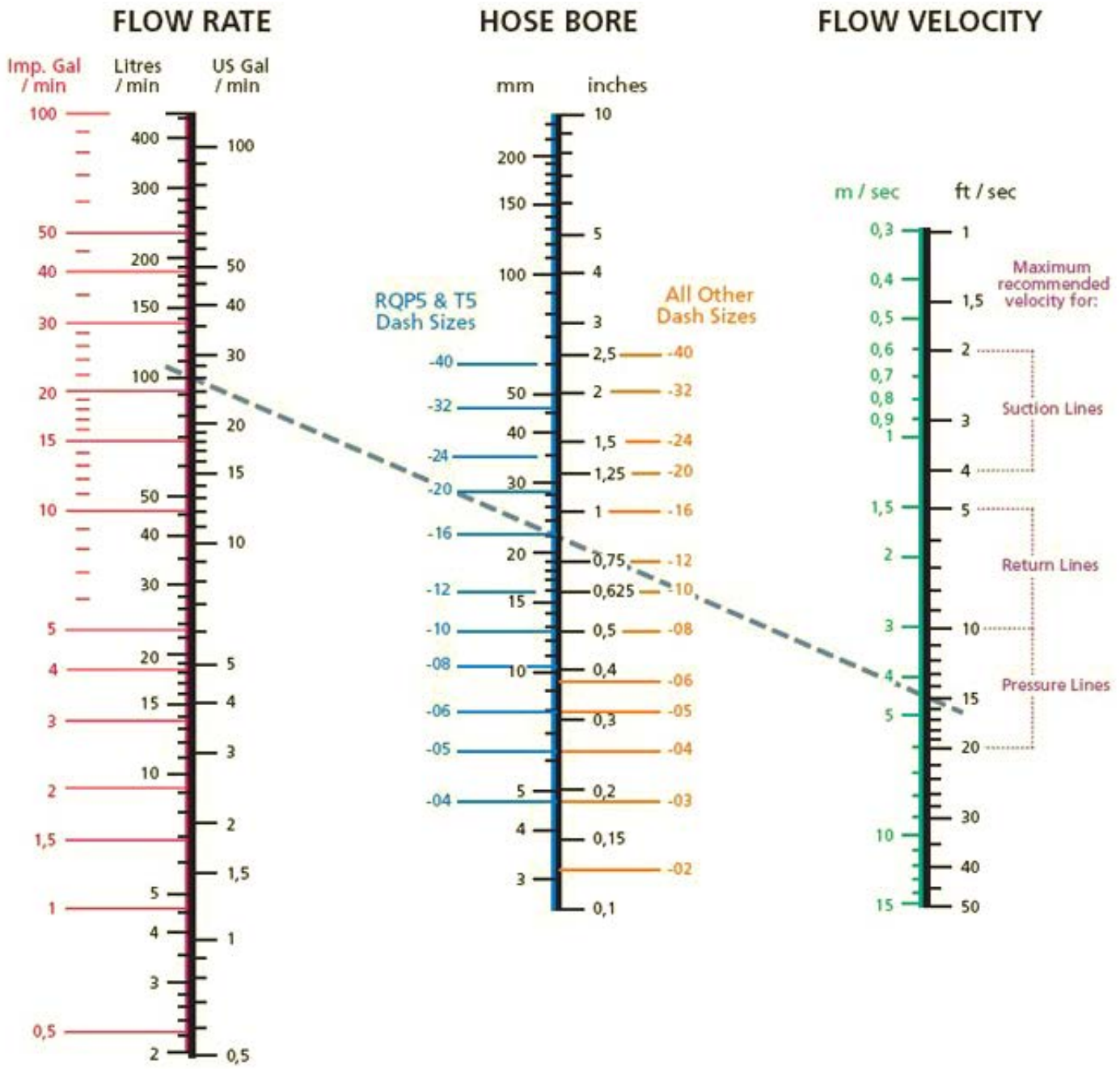

1. Pick the two known values.
2. Lay a straightedge to intersect the two values.
3. Intersection on the third vertical line gives the value of that factor.

Example:
To find the bore size for a Pressure Line consistent with a Flow Rate of 100 litres per minute (26 US or 22 Imperial gallons per minute), and a Flow Velocity of 4.5 metres per second (14.8 feet per second), connect Flow Rate to Flow Velocity and read Hose Bore on centre scale.

Answer:
The line crosses Hose Bore between -12 and -16 on "All Other Dash Sizes" side of Hose Bore axis, so a -16 hose is required. If RQP5 or T5 Hose is to be used, for this example -16 would also be required.

Based On Formula:

$$\text{Area (SQ. IN.)} = \frac{0.321 \times \text{FLOW (G.P.M.)}}{\text{VELOCITY (FT./SEC)}}$$

10.55 Hose Measurements

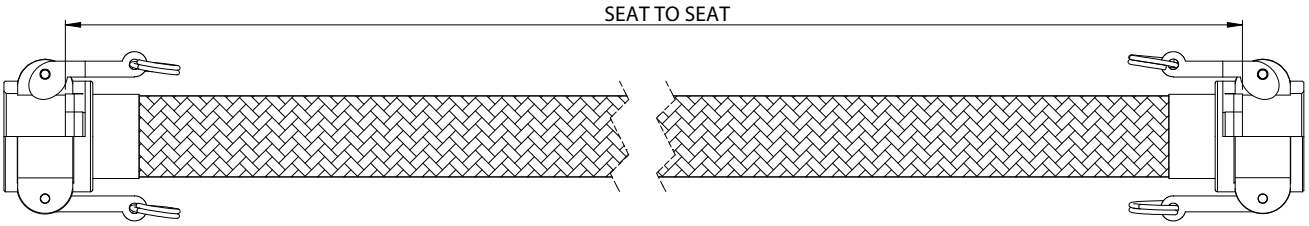

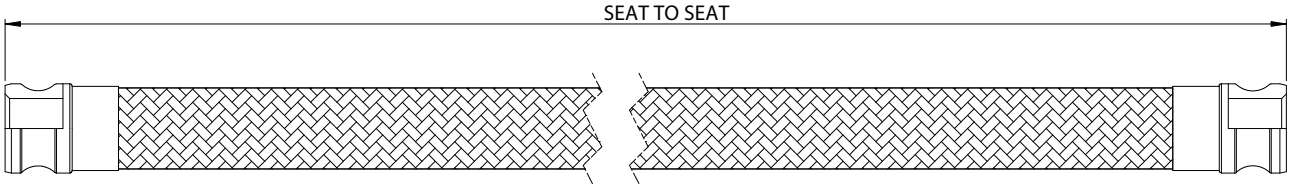

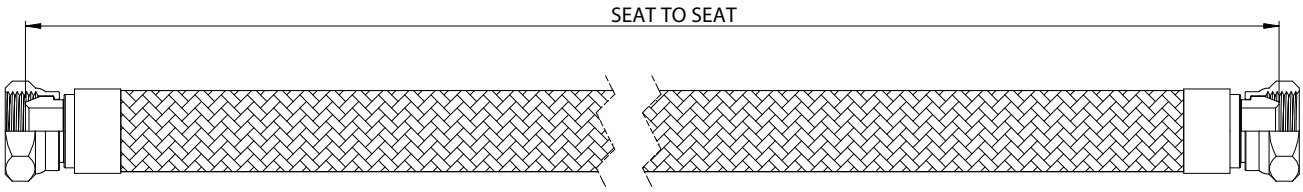

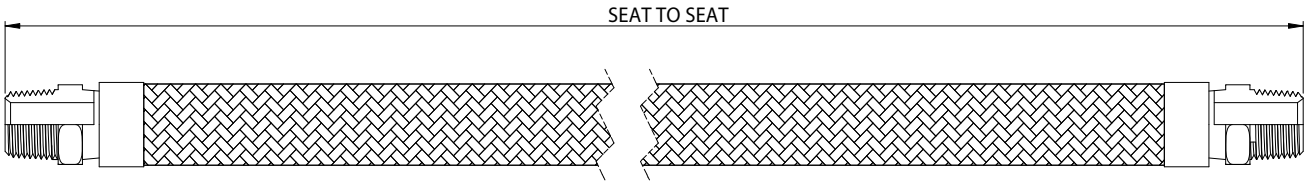

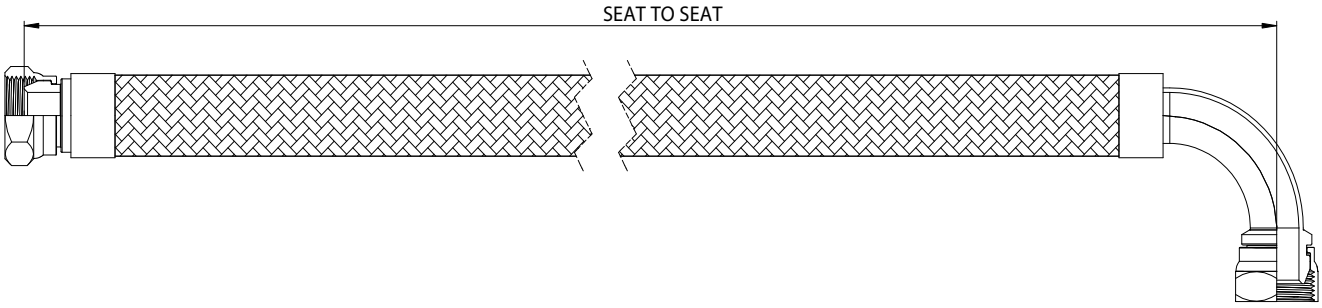

10.56 Hose Measurements

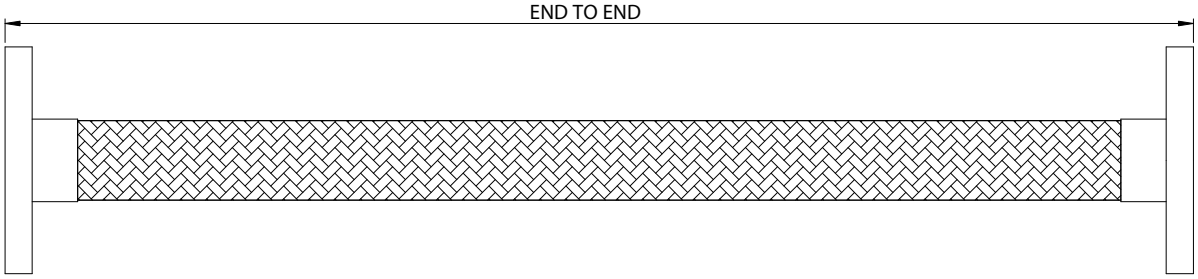

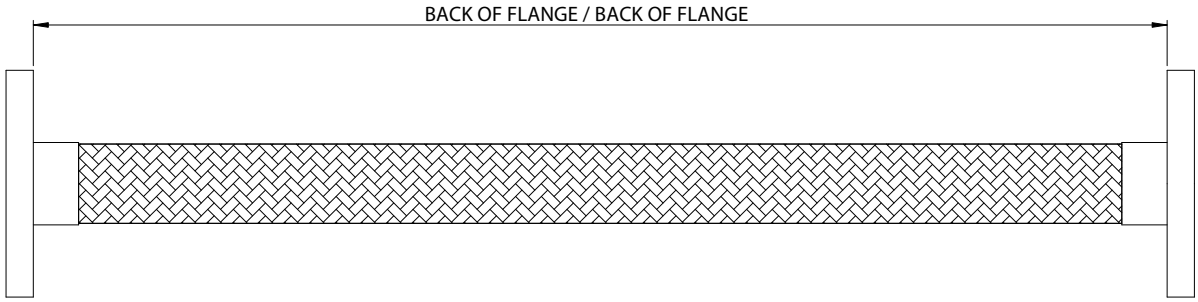

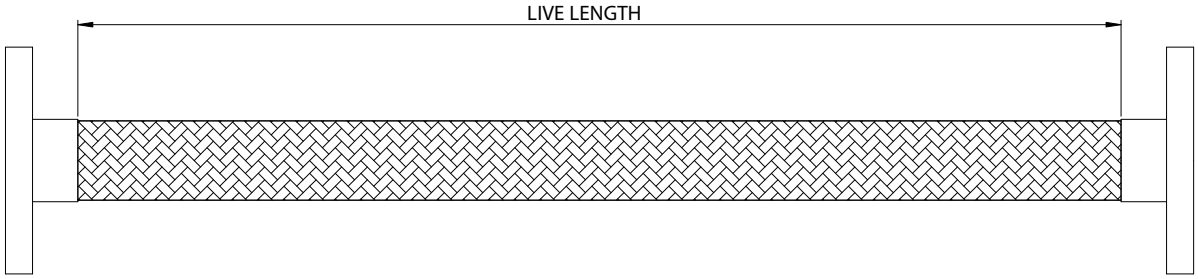

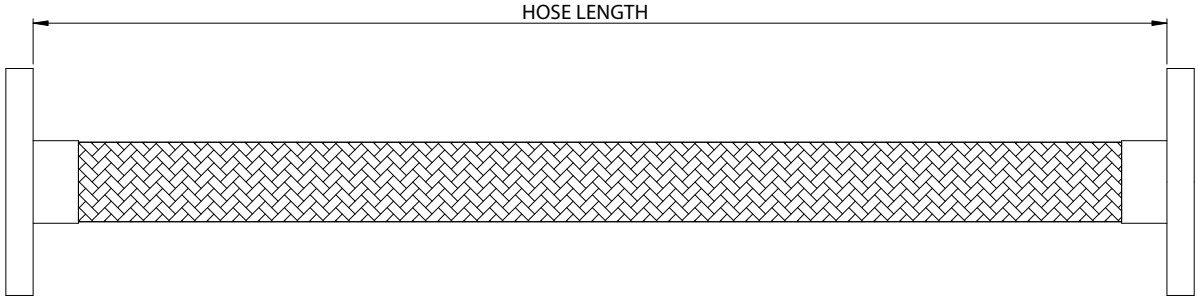

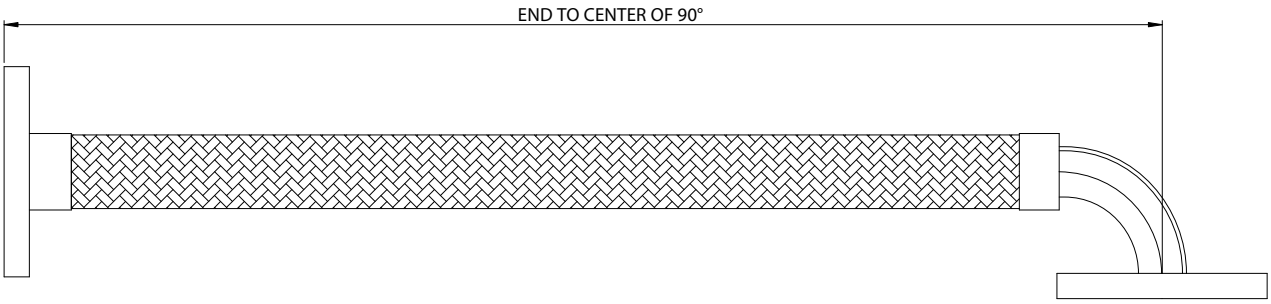

QLD Ph: +617 5593 4292 | salesqld@hoseflex.com **WA** Ph: +618 9468 2840 | saleswa@hoseflex.com **VIC** Ph: +613 8566 7250 | salesvic@hoseflex.com
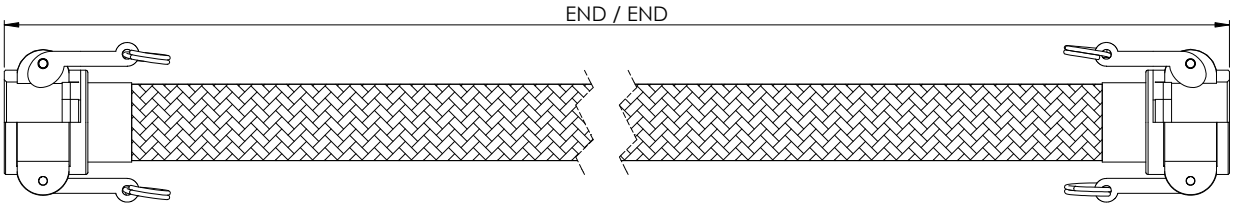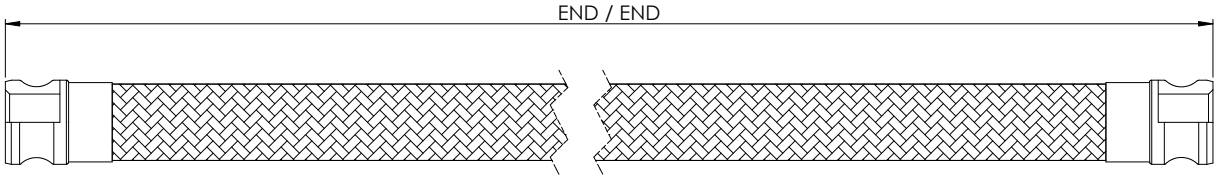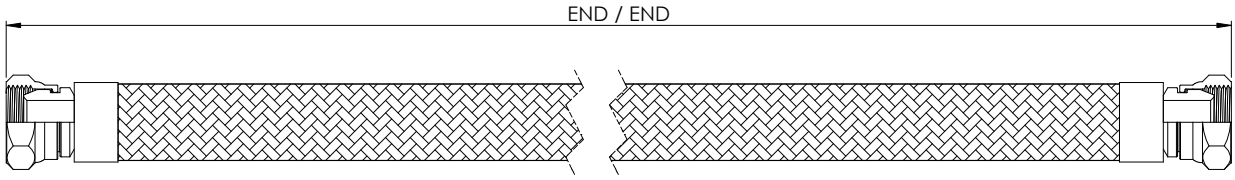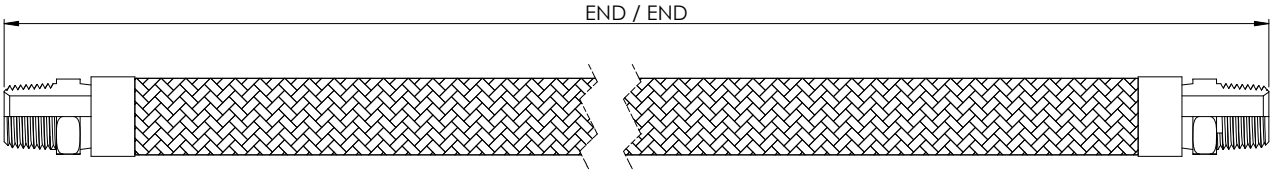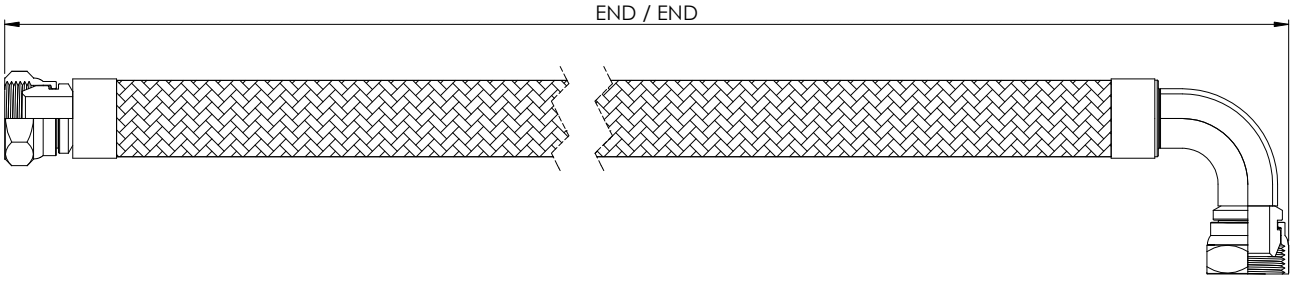
10.57 Hose Measurements